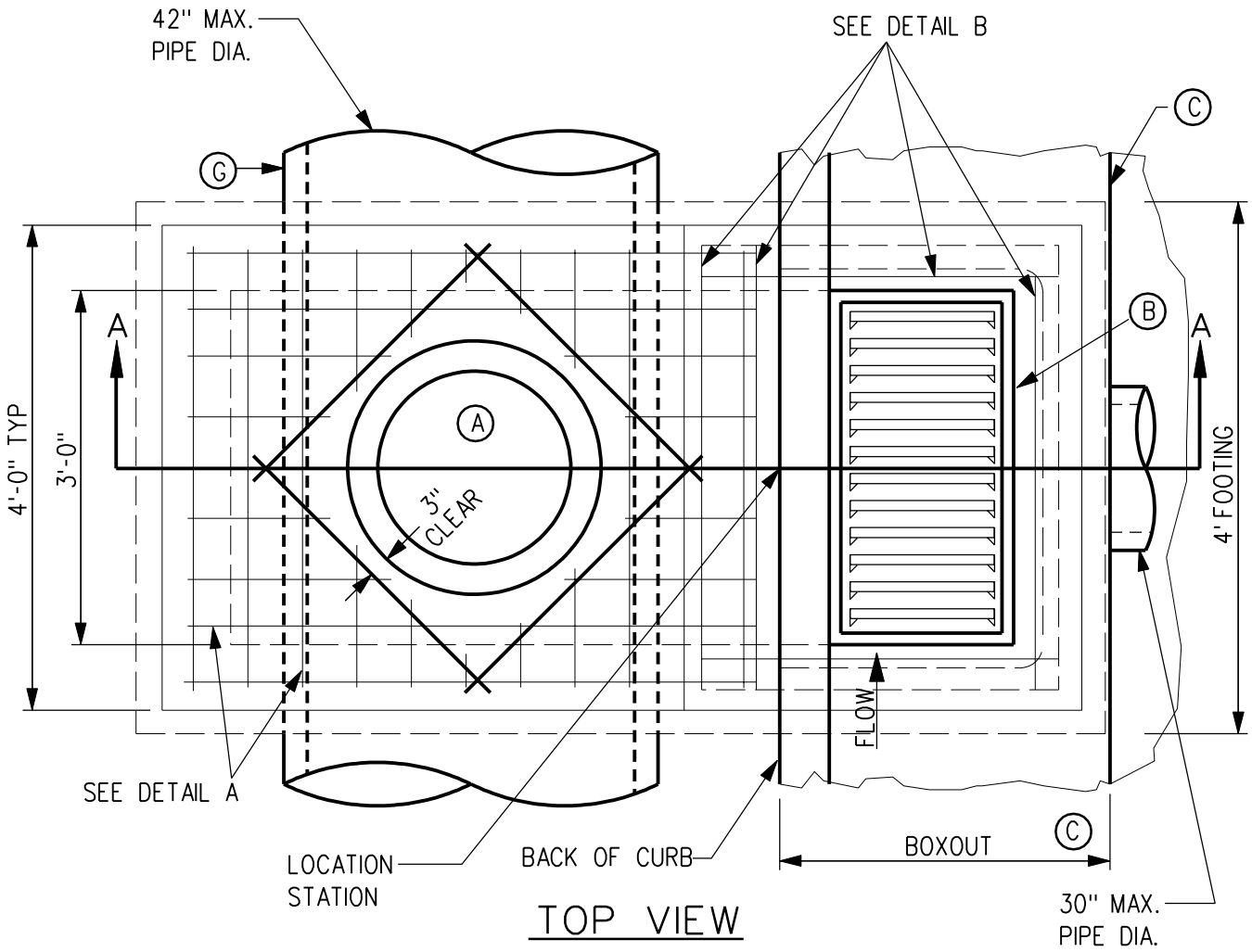

TOP VIEW

NOTE REFERENCE

- (A) STANDARD RING & COVER TYPE "G" CASTING
- (B) INTAKE CASTING - SEE PLANS
- (C) SEE FIGURE 6030.16 FOR BOXOUT DETAIL
- (D) ADJUSTING RING 6" THICK X 6" WIDE 5'-6" X 4'-0" EXTERIOR DIMENSIONS
- (E) CONCRETE BASE-POURED IN PLACE OR PRECAST
- (F) UNDISTURBED SOIL
- (G) CONCRETE SHAPED INVERT

REV.	DATE	BY
2	10/21/03	

DATE: 01-01-98

FOR ADDITIONAL DETAILS SEE SHEET 2.

SPECIAL TYPE "M-C" INTAKE COMBINATION

FIGURE: 6030.4

SHEET 1 OF 2

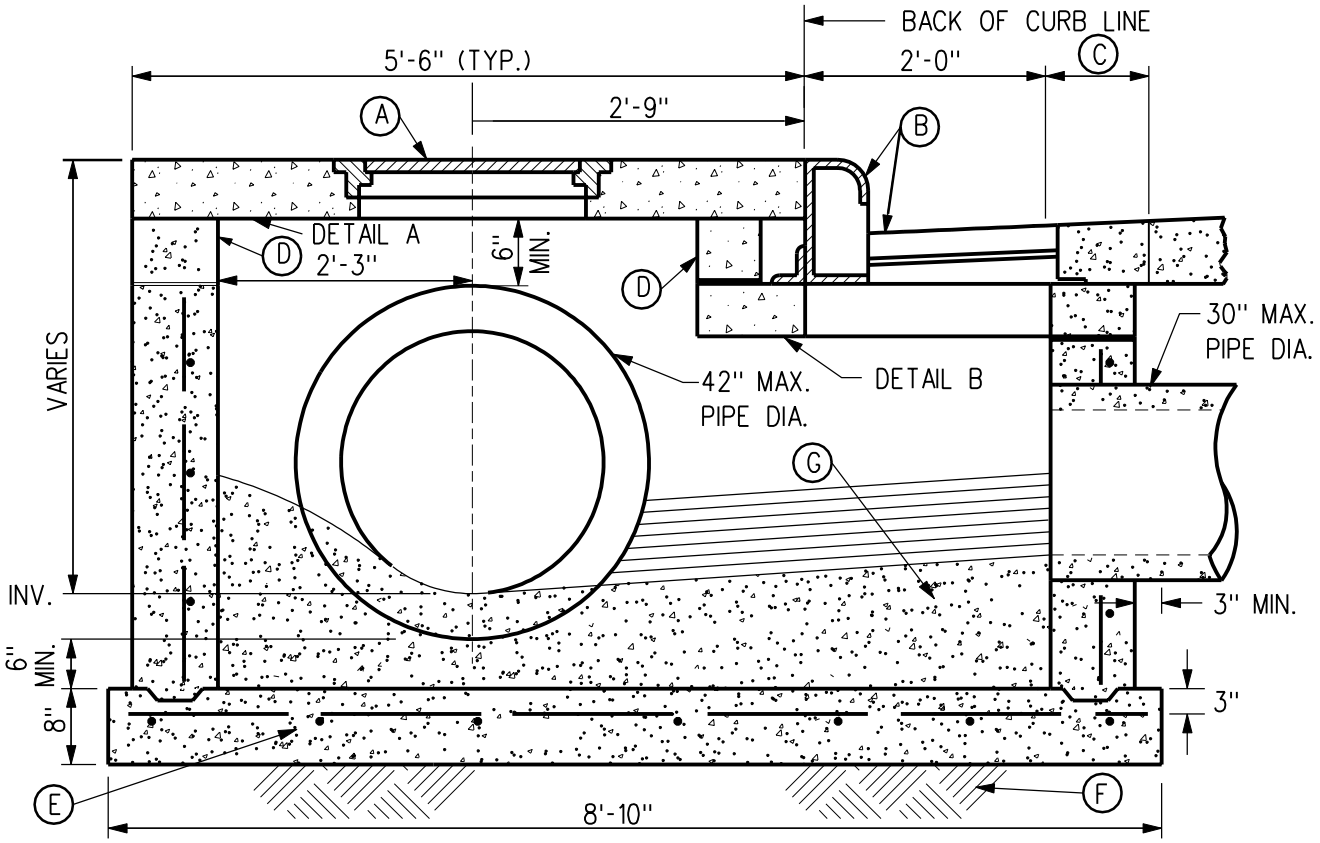

SECTION A-A

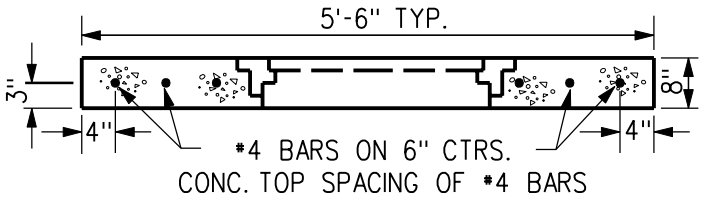

DETAIL A

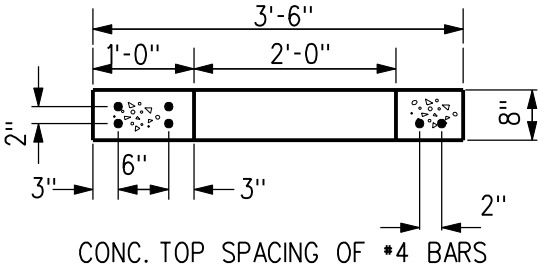

DETAIL B

PIPE SIZE:

MAXIMUM ALLOWABLE PIPE DIAMETERS SHOWN ARE FOR CAST-IN-PLACE STRUCTURES. FOR PRECAST STRUCTURES, THE MAXIMUM ALLOWABLE DIAMETER SHALL BE ONE (1) STANDARD PIPE SIZE SMALLER THAN THOSE SHOWN. ACTUAL PIPE SIZE SHALL BE AS SHOWN THE PLANS

REINFORCING BARS:

1. ALL BARS #4
2. WALLS 12" EACH WAY
3. TOP-SEE DETAILS
4. DIAG. BARS AT ALL CIRCULAR OPENINGS
5. BOTTOM-12" EACH WAY

REV.	DATE	BY	SPECIAL TYPE "M-C" INTAKE COMBINATION	FIGURE: 6030.4
2	10/21/03			
DATE: 01-01-98				SHEET 2 OF 2