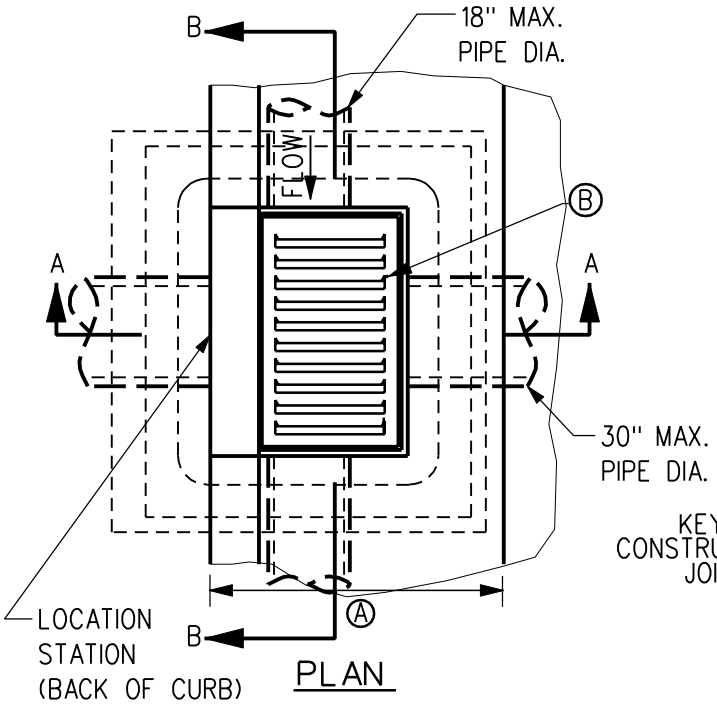

PLAN

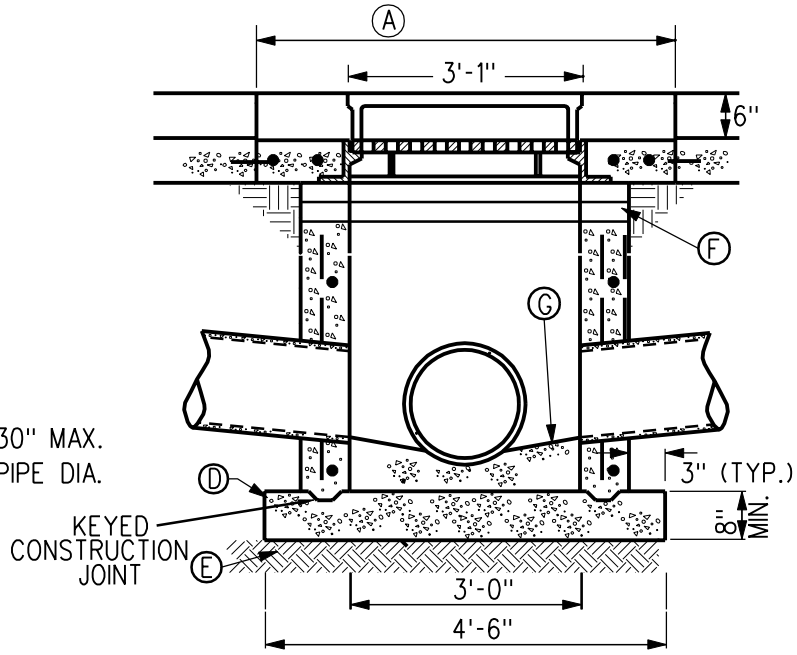

SECTION B-B

NOTE REFERENCE

- (A) SEE FIGURE 6030.16 FOR BOXOUT DETAILS,
- (B) INTAKE CASTING (SEE PLANS) SEE FIGURE 6030.13, 6030.14.
- (C) OPTIONAL CONSTRUCTION JOINT. SECURE WITH KEYWAY (SHOWN) OR NO. 4 X 12" REBAR DOWELS AT 12" SPACING ALL AROUND.
- (D) CONCRETE BASE - POURED IN PLACE OR PRECASTED
- (E) UNDISTURBED SOIL
- (F) ADJUSTING RINGS (2'-0 X 3'-0)
- (G) CONCRETE SHAPED INVERT

REINFORCEMENT:

1. WALLS - #4 BARS AT 15" BOTH WAYS
2. DIAG. BARS AT ALL CIRCULAR OPENINGS

PIPE SIZE:

MAXIMUM ALLOWABLE PIPE DIAMETERS SHOWN ARE FOR CAST-IN-PLACE STRUCTURES. FOR PRECAST STRUCTURES, THE MAXIMUM ALLOWABLE DIAMETER SHALL BE ONE (1) STANDARD PIPE SIZE SMALLER THAN THOSE SHOWN. ACTUAL PIPE SIZE SHALL BE AS SHOWN THE PLANS

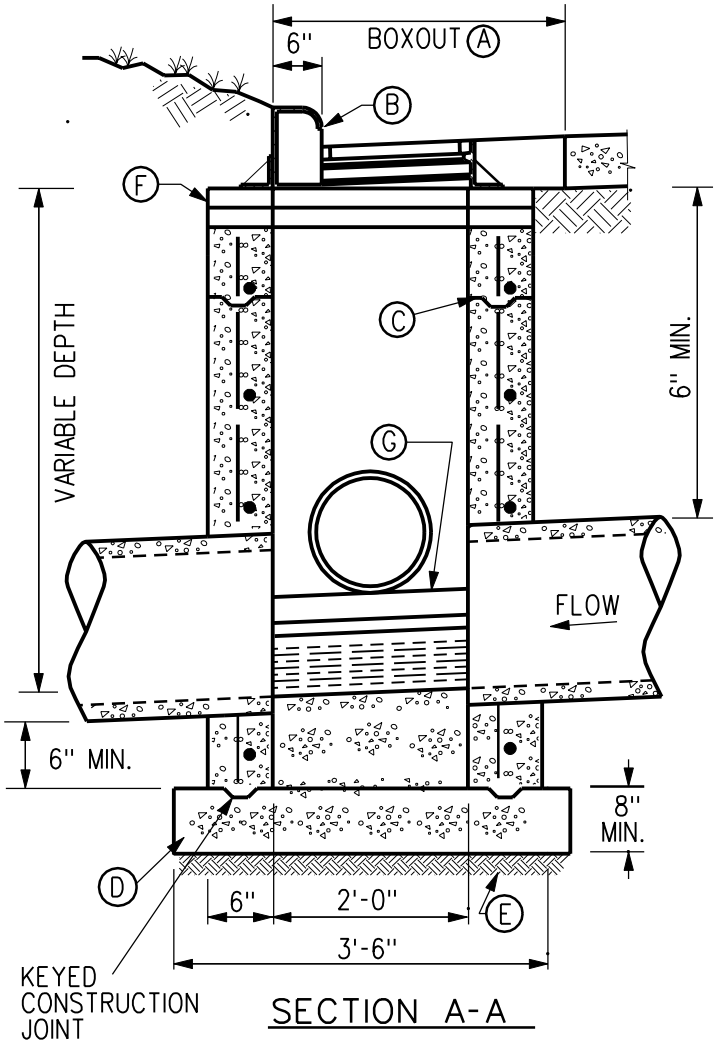

SECTION A-A

REV.	DATE	BY		
2	10/21/03		SINGLE, TYPE "M-A" INTAKE	FIGURE: 6030.1
DATE: 01-01-98				SHEET 1 OF 1