DESIGN LIFT THICKNESSES GREATER THEN 50 mm (WITHOUT FILLET)

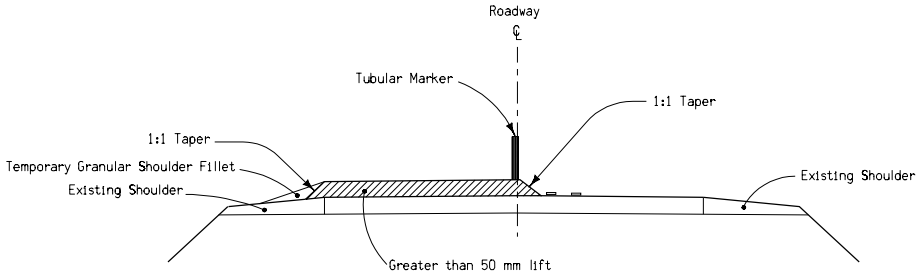

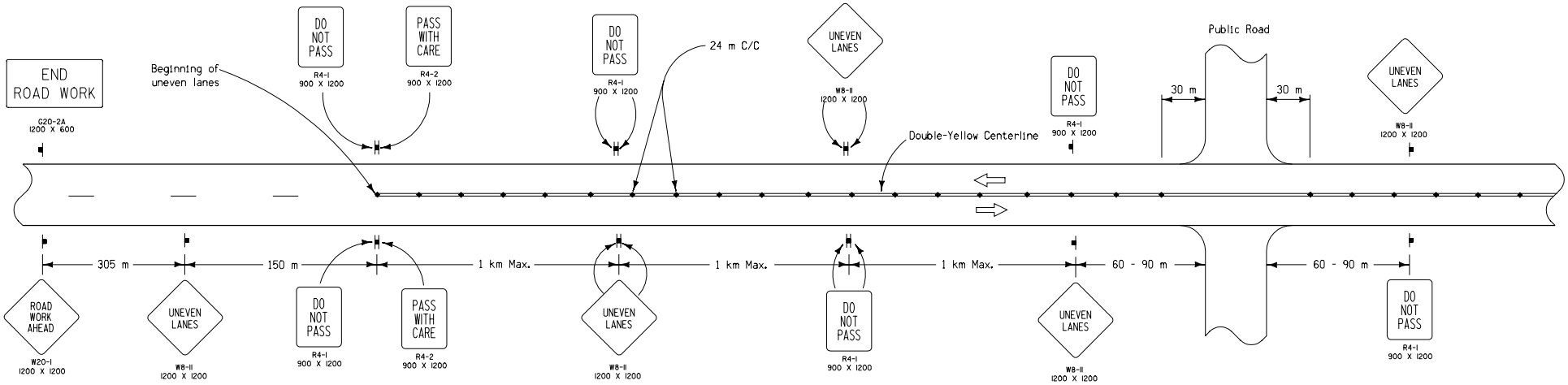

"No-Passing" zones shall not exceed 4 km for ADT less than 2500 or 3 km for ADT from 2500 to 5000.

(1) Spacing = 12 m where horizontal curve radius is less than 305 m.

Contract Items:

Traffic Control

Painted Pavement Markings

Tabulation: 108-22

All dimensions given in millimeters unless noted.

LEGEND

- Traffic Sign
- Direction of Traffic
- 1050 mm Channelizer or Vertical Panel

M

METRIC VERSION

Iowa Department of Transportation

STANDARD ROAD PLAN

REVISION	
NEW	10-17-06

TC-282(2)

SHEET 2 of 2

REVISIONS: Replaces RS-17C.

Deanna Maifield

APPROVED BY DESIGN METHODS ENGINEER

UNEVEN LANES