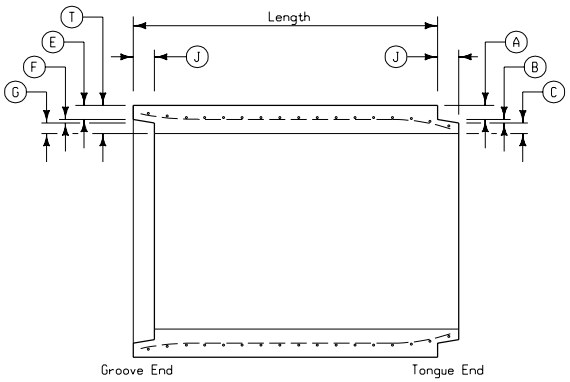

SINGLE LINE REINFORCEMENT

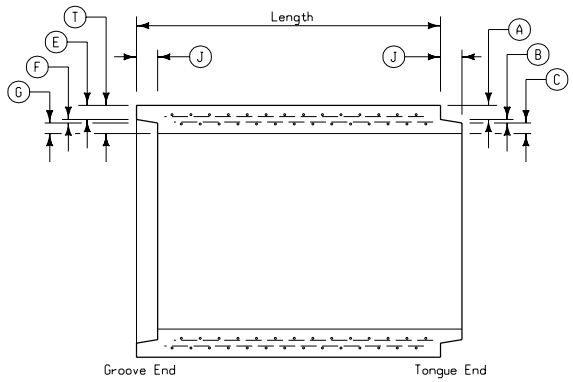

DOUBLE LINE REINFORCEMENT

GENERAL NOTES:

Details on this sheet indicate typical requirements for concrete arch pipe. Reinforced concrete arch pipe shall conform to the requirements of AASHTO M 206M for Reinforced Concrete Arch Culvert Storm Drain and Sewer Pipe. Reinforcement of the pipe shall be as indicated in AASHTO M 206M or as otherwise approved by the Engineer.

Materials and methods of construction shall be in accordance with current Standard and Supplemental Specifications.

This pipe shall be in accordance with "Rigid Pipe Culverts" in the current Standard and Supplemental Specifications.

Welded wire fabric shall meet the requirements of ASTM A 185.

Tie bolts and bolt holes are necessary only when specifically required in detail project plans.

Price bid for "Concrete Arch Roadway Pipe Culvert" of the size specified shall be considered full compensation for fabrication and installation of concrete arch pipes as detailed hereon.

SPECIAL NOTES:

The minimum allowable cover for roadway culverts is 600 millimeters. The maximum allowable cover for all sizes and installations of Concrete Arch Roadway Pipe Culvert is 3.6 meters.

TABLE OF DIMENSIONS

Nominal Dimensions Span x Rise	Equiv. Dia.	Water Area	Span	Rise	Approximate Dimensions - mm								Radii mm			Approx. mass/m
					T	A	B	C	J	E	F	G	R_1	R_2	R_3	
mm	mm	m^2	mm	mm												kg/m
560 x 345	450	0.15	560	345	65	35	10	20	50	30	10	25	700	350	135	260
725 x 460	600	0.26	725	460	75	40	10	25	70	35	10	30	1035	370	115	475
920 x 570	750	0.41	920	570	90	40	15	35	75	35	15	40	1300	475	155	675
1110 x 675	900	0.59	1110	675	100	45	15	40	90	40	15	45	1575	570	160	910
1300 x 795	1050	0.82	1300	795	115	50	20	45	100	45	20	50	1855	665	190	1100
1485 x 915	1200	1.06	1485	915	125	55	20	50	125	50	20	55	2135	760	220	1330
1650 x 1015	1350	1.33	1650	1015	140	65	20	55	125	55	20	65	2350	850	250	1630
1855 x 1145	1500	1.64	1855	1145	150	80	20	50	125	70	20	60	2670	955	285	2000
2235 x 1370	1800	2.38	2235	1370	175	95	25	55	150	85	25	65	3200	1145	320	2805
2590 x 1575	2100	3.21	2590	1575	200	100	25	75	150	90	25	85	4130	1320	355	3705
2920 x 1830	2250	4.13	2920	1830	215	105	25	85	180	95	25	95	4650	1500	490	4315
3100 x 1960	2400	4.80	3100	1960	225	110	25	90	180	100	25	100	5535	1575	510	5225
3505 x 2215	2700	6.13	3505	2215	250	125	25	100	180	115	25	110	6835	1780	570	6550
3910 x 2460	3000	7.60	3910	2460	275	135	25	115	180	125	25	125	7655	1980	610	8035
4285 x 2705	3300	9.21	4285	2705	250	125	25	100	180	115	25	110	8355	2175	685	8020

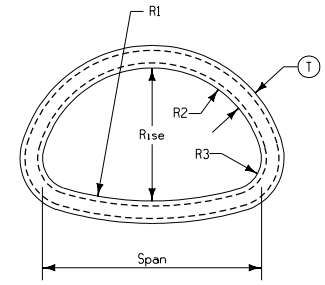

DOUBLE LINE REINFORCEMENT

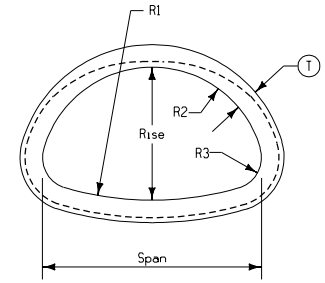

SINGLE LINE REINFORCEMENT

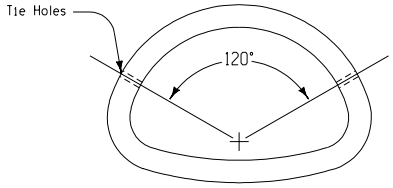

TIE HOLE LOCATION

All dimensions given in millimeters unless noted.

M

METRIC VERSION

Iowa Department of Transportation
Project Development Division

STANDARD ROAD PLAN **RF-41**

REVISION: Add 'T' dimension to drawing.

REVISION NO. 2

REVISION DATE 10-31-95

David R. Little 07-31-95
APPROVED BY DESIGN METHODS ENGINEER

REINFORCED CONCRETE ARCH PIPE