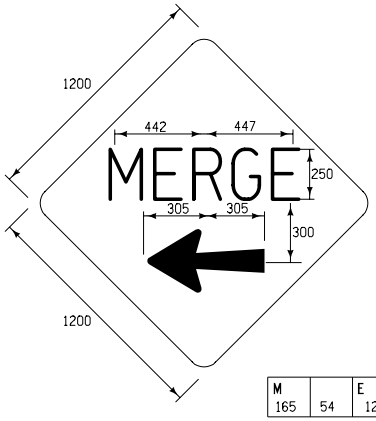

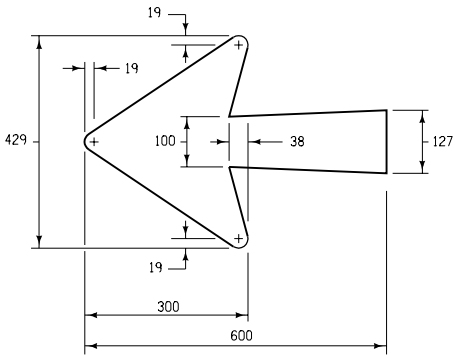

M		E		R		G		E	
165	54	127	43	139	43	139	54	127	

DETAILS OF "TWO WAY TRAFFIC" SIGN

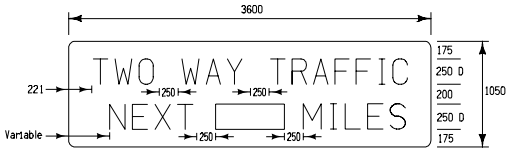

T	155	T	155								
	16		48								
W	222	R	171								
	48		48								
O	179	A	212					M	196		
	620		48						59		
		F	155	N	171			I	40		
			48		59				59		
W	222	F	155	E	155			L	155		
	16		48		48				48		
A	212	I	40	X	171			E	155		
	16		59		32				48		
Y	214	C	171	T	155			S	171		
	680		1358		791				931		

BACKGROUND - ORANGE LETTERS, NUMERALS, & BORDER - BLACK

DETAILS OF "EXIT" SIGN AND EXIT NUMBER PANEL

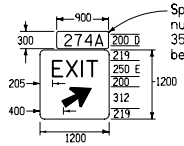

Space between numerals or numerals and letters shall be 35 mm. The exit number shall be centered on the panel.

E	186		
	52		
X	218		
	52		
I	44		
	52		
T	186		
	790		

ARROW - 3, 430 - 30°
BACKGROUND - ORANGE
LETTERS, NUMERALS, ARROW & BORDER - BLACK

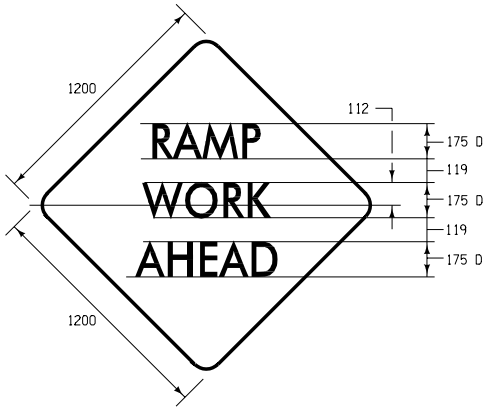

DETAILS OF "EXIT" SIGN

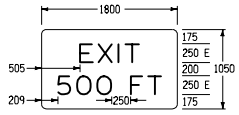

E	186			5	202
	52				52
X	218			O	210
	52				52
I	44			O	210
	52				726
T	186				
	790			F	186
					35
				T	186
					407

BACKGROUND - ORANGE
LETTERS, NUMERALS, & BORDER - BLACK

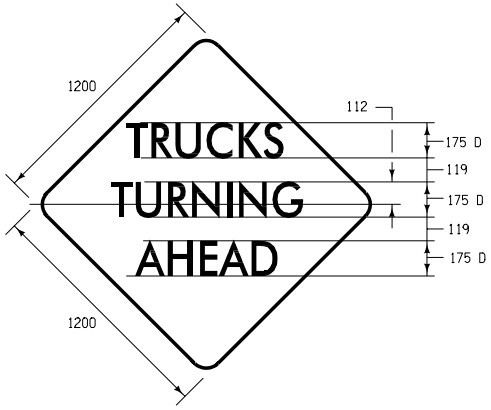

All dimensions given in millimeters unless noted.

M

METRIC VERSION

Iowa Department of Transportation

STANDARD ROAD PLAN

REVISION	
NEW	10-17-06

RD-65

SHEET 1 of 1

REVISIONS: Create a new standard for all "special" signs used on traffic control standards.

Deanna Maifield
APPROVED BY DESIGN METHODS ENGINEER

SPECIAL SIGNS FOR TRAFFIC CONTROL