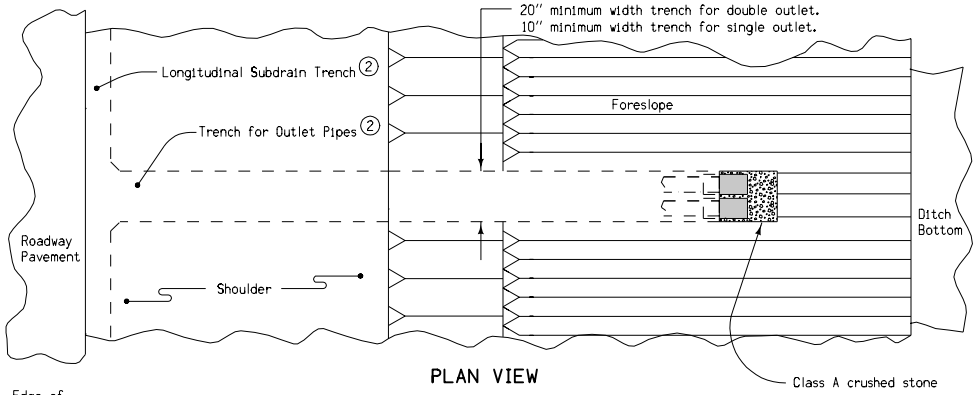

PLAN VIEW

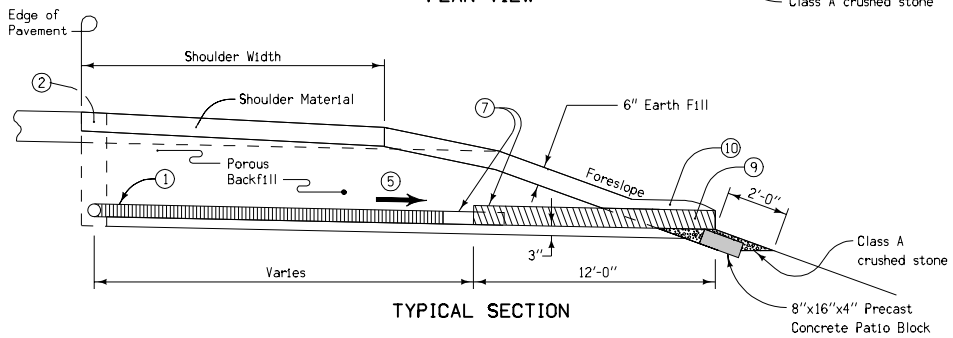

TYPICAL SECTION

LONGITUDINAL AND TRANSVERSE OUTLETS

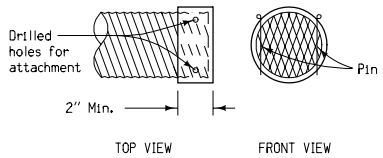

REMOVABLE GRATE ⑥

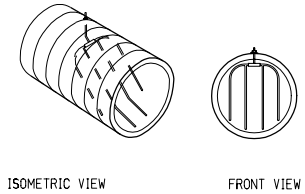

REMOVABLE FORK ⑥

RODENT GUARDS ⑥

Transverse and backslope drains only require single outlets. Double outlet pipes shall be used on all longitudinal subbdrain systems, except at the end and beginning of the system or as shown in the plans. At these locations, a single outlet pipe will be required.

① 4" perforated Subdrain (Polyethylene Corrugated Tubing).

② On projects where existing shoulder material is removed, the shoulder material shall be replaced as per "Placing Longitudinal Subdrains" of the current Standard and Supplemental Specifications.

③ 'Y or T' connection shall not be allowed. Place subdrain on 1 foot minimum radius.

④ Direction of flow.

⑤ 6" minimum drop in elevation between longitudinal subdrain and outlet. 12" minimum drop for projects using recycled PCC subbase.

⑥ Removable grate rodent guard shall be used on all projects except those using recycled PCC subbase. For projects using recycled PCC subbase, use the removable fork rodent guard. See Materials I.M. 443.01 for approved suppliers.

⑦ 6" corrugated metal pipe outlet or 4" corrugated double-walled PE or PVC pipe with an appropriate coupler. If metal pipe is used, the pipes should be coupled in one of the following ways: (1) Use an inside fit reducer coupler (coupler must be inserted a minimum of 12" in CMP); or (2) Insert 12 of the 4 subdrain into the 6" metal outlet pipe, then fully seal the entire opening with grout.

⑧ Trench shall be beveled to provide a minimum of 3" of porous backfill surrounding all portions of subdrain pipe.

⑨ Corrugated metal pipe outlet 2" larger than existing subdrain pipe, or corrugated double-walled PE or PVC pipe of the same diameter as the existing subdrain pipe.

⑩ Class '10' material shall be mounded over outlet and carefully compacted to avoid damaging outlet pipe.

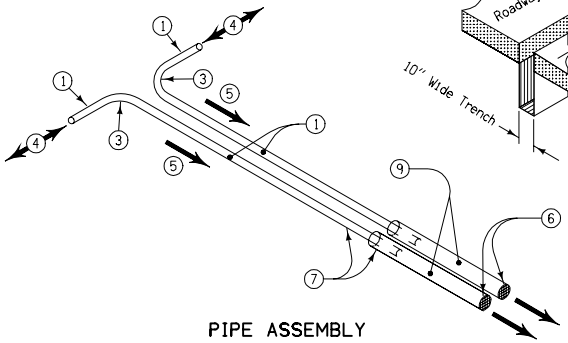

PIPE ASSEMBLY
ISOMETRIC VIEW

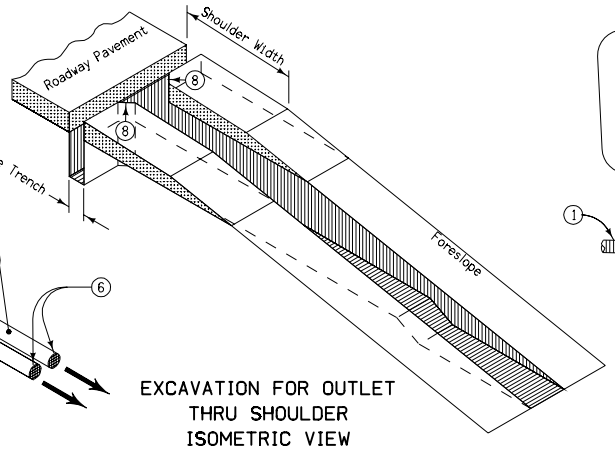

EXCAVATION FOR OUTLET
THRU SHOULDER
ISOMETRIC VIEW

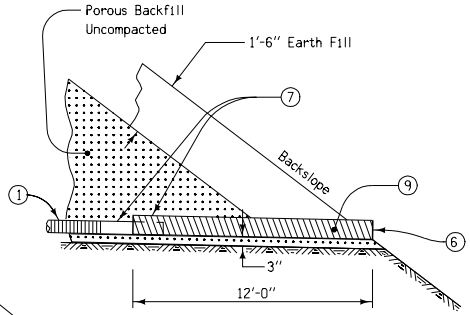

BACKSLOPE OUTLET
TYPICAL SECTION

Contract Item:

Subdrain Outlet, RF-19E

Tabulation: 104-9

Iowa Department of Transportation

STANDARD ROAD PLAN

REVISION	
12	04-17-07

RF-19E

SHEET 1 of 1

REVISIONS: Pointed out Class A crushed stone at outlet. Reorganized drawing.

Deanna Maifield

APPROVED BY DESIGN METHODS ENGINEER

OUTLETS
FOR LONGITUDINAL, TRANSVERSE
AND BACKSLOPE SUBDRAINS