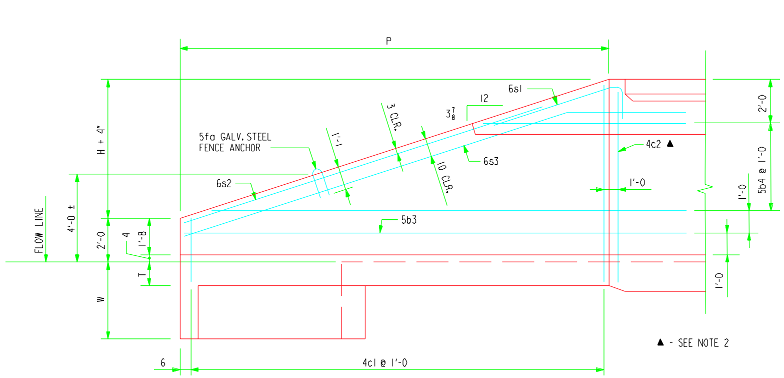

TYPICAL VIEW - FRONT FACE REINFORCING

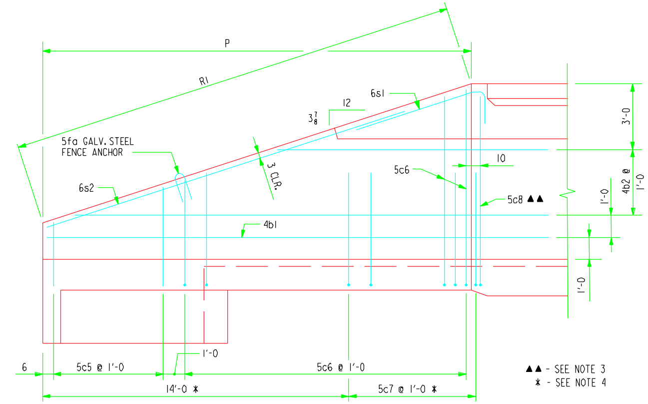

TYPICAL VIEW - BACK FACE REINFORCING

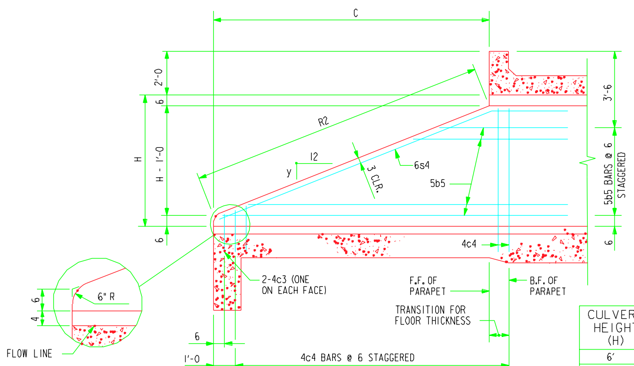

TYPICAL VIEW - CENTER WALL

CULVERT HEIGHT (H)	SLOPE y INCHES
6'	$4\frac{3}{4}$
8'	$5\frac{1}{16}$
10'	$5\frac{1}{4}$
12'	$5\frac{3}{8}$

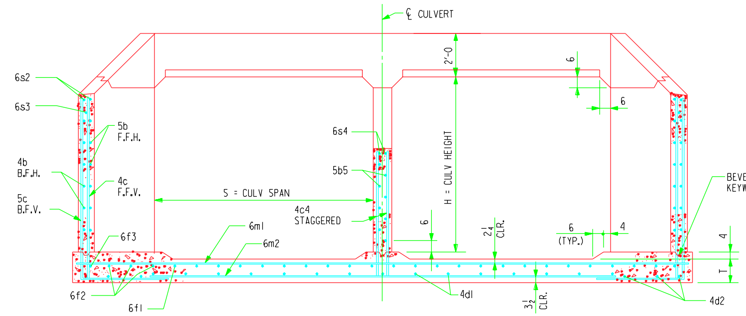

TYPICAL SECTION - NEAR CENTER OF APRON

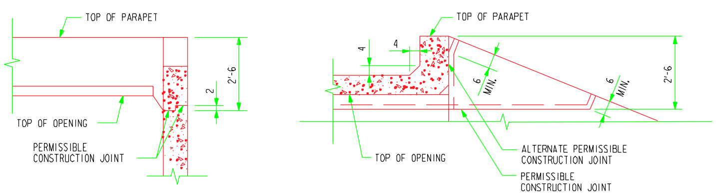

TOP OF WINGWALL DETAILS

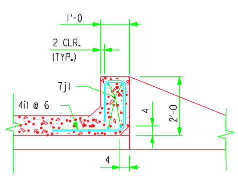

SECTION THRU PARAPET

NOTES :

1. BAR SPACINGS AND POSITIONS SHOWN ARE SIMILAR FOR ALL SIZES OF HEADWALLS IN THIS STANDARD.
2. ONE 4c2 BAR, HEADWALL HEIGHTS OF H=6', H=8', H=10' AND TWO 4c2 BARS, HEADWALL HEIGHT OF H=12'.
3. ONE 5c8 BAR, HEADWALL HEIGHTS OF H=6', H=8', H=10' AND TWO 5c8 BARS, HEADWALL HEIGHT OF H=12'.
4. NOT APPLICABLE TO HEADWALL HEIGHT OF H=6'.
5. FOR DIMENSION TABLE SEE DRAWING TWH 0-1-87.

LATEST REVISION DATE : 1-1-98

APPROVED BY :

STANDARD DESIGN

FLARED WING HEADWALLS

FOR

TWIN REINFORCED CONCRETE BOX CULVERTS

HIGHWAY DIVISION

IOWA DEPARTMENT OF TRANSPORTATION

JULY , 1987

TWH 0-3-87

REVISED 1/98: CLEAR DISTANCE TO 4i1 BAR CHANGED.
REVISED : 12/96 ; KEYWAY NOTATION CHANGED.
TWH03.S01

XXXXXXXXXXSYSTEMTIME XXXXXXXUSERNAME XXXXXXXXXXXXXXXXXXXXXXXXXXXXXXXXXXXXXXXXXXXXXXXXXXXXXXXXXXXXXXXXDGNSPEC