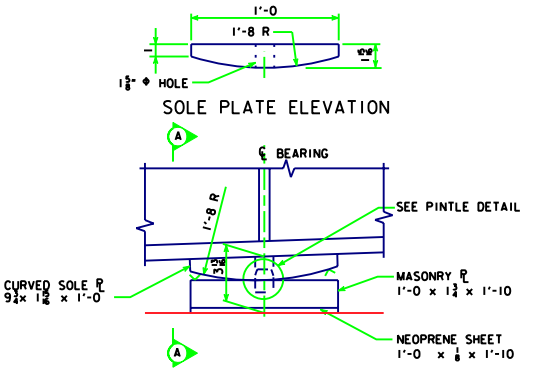

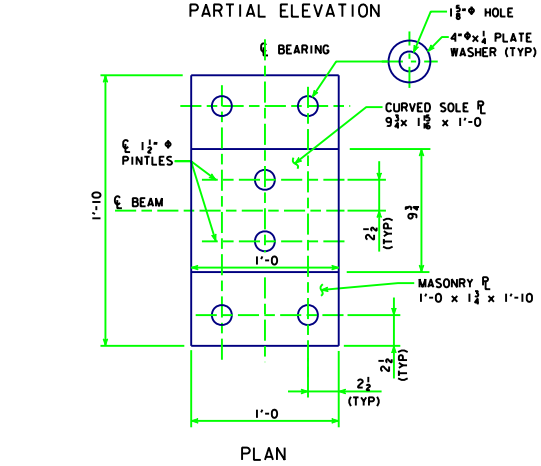

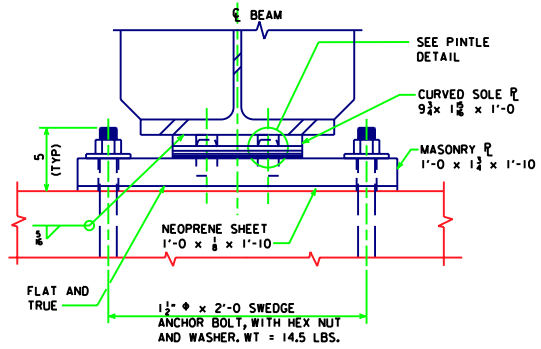

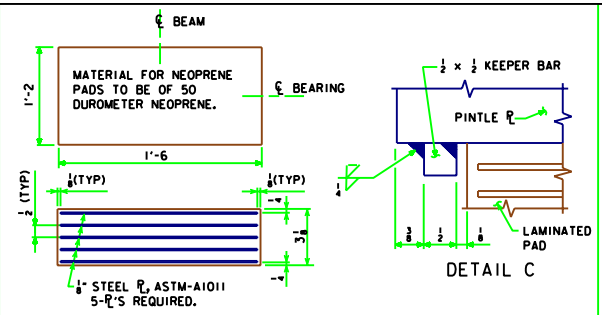

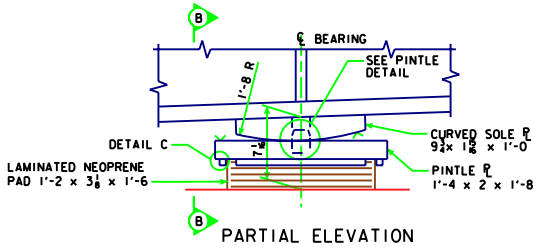

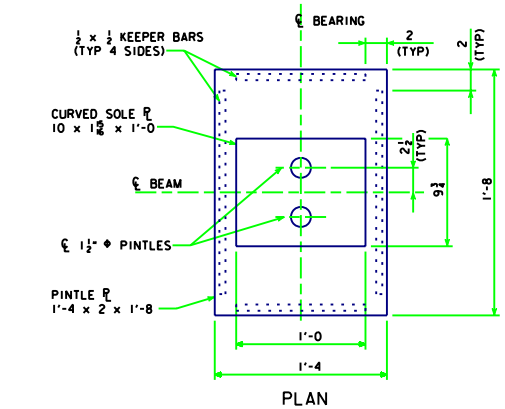

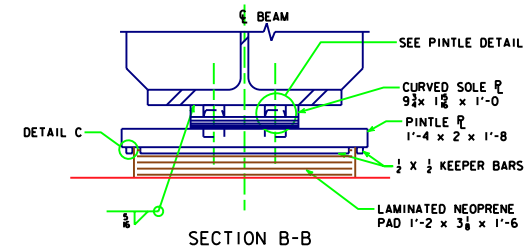

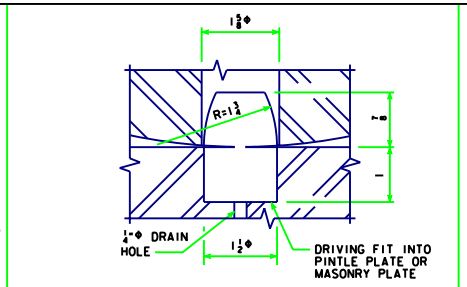

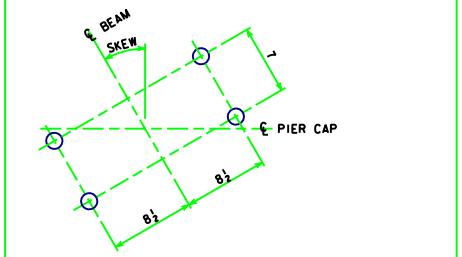

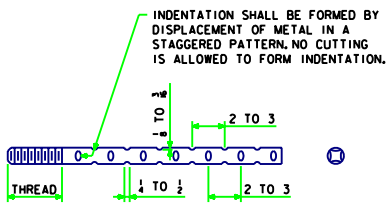

BEARING NOTES:

1. SURFACES MARKED "V" SHALL MEET ANSI 250 SURFACE FINISH.
2. MASONRY PLATES ARE TO BE SET ON A 1/8 INCH NEOPRENE SHEET.
3. PINTLE PLATES, SOLE PLATES, KEEPER BARS, MASONRY PLATES, AND NEOPRENE SHEETS ARE A PART OF THE SUPERSTRUCTURE STRUCTURAL STEEL QUANTITY. UNIT PRICE BID FOR "STRUCTURAL STEEL" SHALL INCLUDE ALLOWANCE FOR COST OF THE NEOPRENE SHEETS AND NEOPRENE BEARING PAD.
4. THE PINTLE PLATES, KEEPER BARS AND MASONRY PLATES SHALL BE GALVANIZED. ALL WELDING SHALL BE COMPLETED PRIOR TO GALVANIZING.
5. THE SURFACE OF THE PINTLE PLATE IN CONTACT WITH THE LAMINATED NEOPRENE PADS AND CURVED SOLE PLATE SHALL BE FREE OF PROJECTIONS DUE TO THE GALVANIZING.
6. CURVED SOLE PLATES SHALL COMPLY WITH ASTM A709 GRADE 50W AND SHALL BE PAINTED PER STANDARD SPECIFICATIONS. KEEPER BARS, PINTLE PLATES AND MASONRY PLATES, WHICH ARE TO BE GALVANIZED, SHALL COMPLY WITH ASTM A709 GRADE 50.
7. ANCHOR BOLTS, NUTS AND WASHERS SHALL MEET THE REQUIREMENTS OF IM 453.08.
8. BEARINGS SHOWN ON THIS DRAWING MAY BE USED FOR APPLICATIONS WITH LOCAL BEAM SLOPES BETWEEN 0% - 6%±. FOR SITUATIONS OUTSIDE OF THIS SLOPE RANGE, THE DESIGNER SHALL EVALUATE THE BEARING'S APPLICABILITY IN ACCORDANCE WITH CURRENT IOWA DEPARTMENT OF TRANSPORTATION AND AASHTO POLICY ON BEARING DESIGN.

07-06
LATEST REVISION DATE

APPROVED BY BRIDGE ENGINEER

Iowa Department of Transportation
Highway Division

STANDARD DESIGN - 40' ROADWAY, 3 SPAN BRIDGES

ROLLED STEEL BEAM BRIDGES

FEBRUARY, 2004

PIER BEARING DETAILS
160'-0 TO 220'-0 SPAN

RS40-67-04

REVISION - 07-06 - 1/8" LEAD SHEET CHANGED TO 1/8" NEOPRENE SHEET.