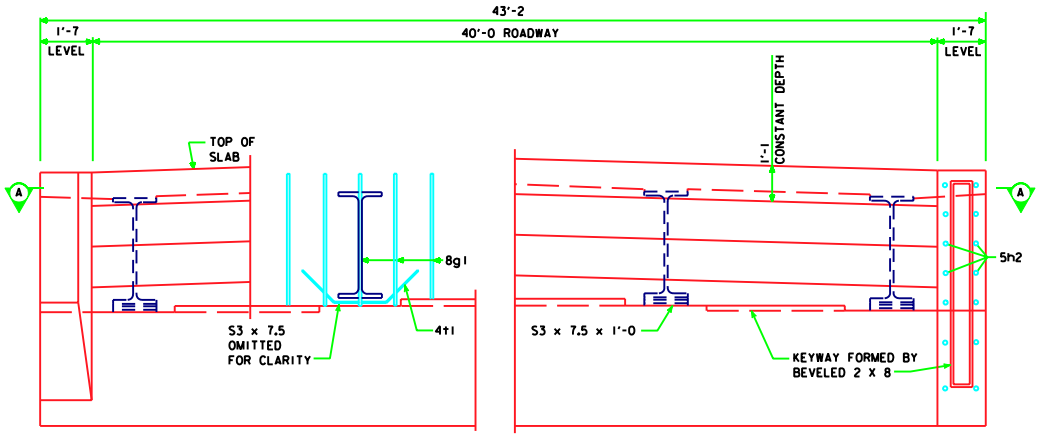

PART REAR ELEVATION AT ABUTMENT

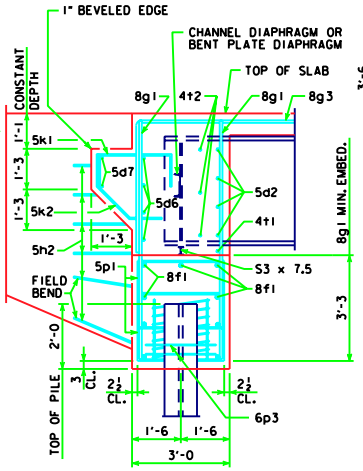

PART SECTION B-B

ABUTMENT STEP DIAGRAM
(REAR ELEVATION)

NOTES:
1. HOLES DRILLED THROUGH BEAM WEB FOR 5d2 AND 4t2 BARS.
2. THE SPIRAL AT THE TOP OF EACH PILE TO BE 7 TURNS OF No. 2 BAR, 21" DIAMETER, 3" PITCH WITH 2 - L⅝ x ⅜ x ⅛ SPACERS PUNCHED TO HOLD SPIRAL.

ABUTMENT NOTES:

MINIMUM CLEAR DISTANCE FROM FACE OF CONCRETE TO NEAR REINFORCING BAR IS TO BE 2" UNLESS OTHERWISE NOTED OR SHOWN.

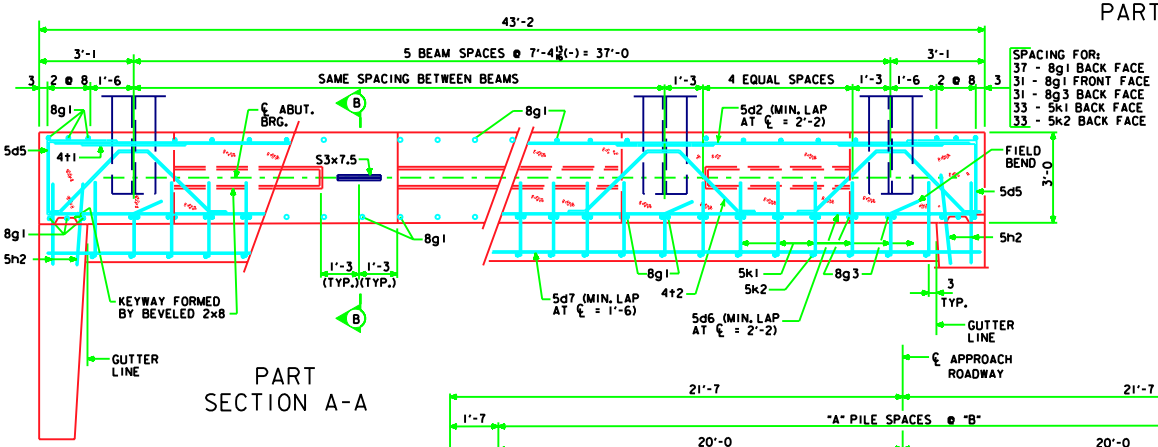

PART SECTION A-A

ABUTMENT PILE SPACING

DIMENSION OR NO.	℄ TO ℄ ABUTMENT BEARING							
	160'-0	180'-0	200'-0	220'-0	240'-0	260'-0	280'-0	300'-0
"A" (IN)	6	6	7	7	7	7	8	8
"B" (FT-IN)	6'-8	6'-8	5'-8 3/16	5'-8 3/16	5'-8 3/16	5'-8 3/16	5'-0	5'-0
"C" EQUAL SPACES	5	5	4	4	4	4	3	3
NO. OF PILES PER ABUT.	7	7	8	8	8	8	9	9
DESIGN PILE LOAD (TONS)	34	36	33	35	36	37	35	36

NOTE: HP 10 x 42 STEEL BEARING PILING REQUIRED.

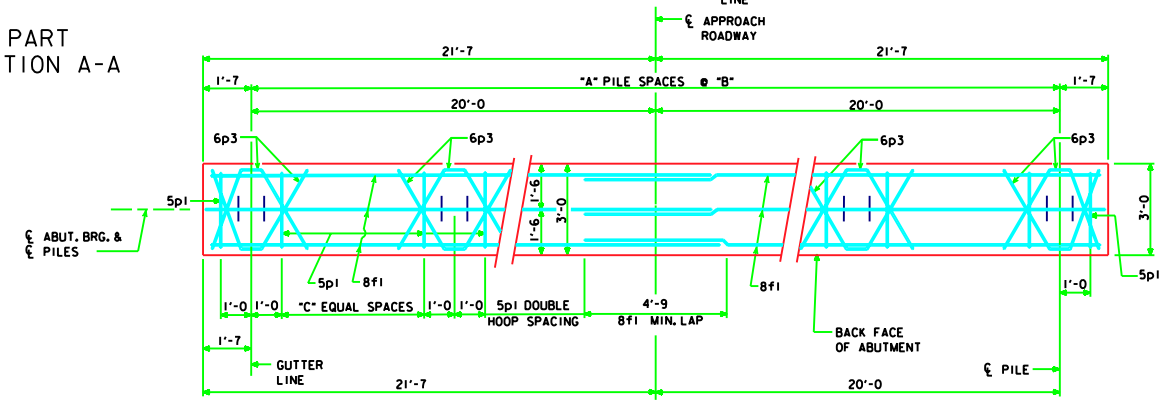

ABUTMENT PILE PLAN

NOTE: BARRIER RAIL NOT SHOWN IN DETAILS.

07-06
LATEST REVISION DATE

APPROVED BY BRIDGE ENGINEER

Iowa Department of Transportation
Highway Division

STANDARD DESIGN - 40' ROADWAY, 3 SPAN BRIDGES

ROLLED STEEL BEAM BRIDGES

FEBRUARY, 2004

ABUTMENT DETAILS
0° SKEW

RS40-21-04

REVISION - 07-06 - CHANGED TO ALL EPOXY, PAVING NOTCH EXTENDED. PILE SIZE NOTE AND BARRIER RAIL NOTE ADDED.