BILL OF REINFORCING STEEL FOR SUPERSTRUCTURE - 100' BRIDGE

LOCATION	SHAPE	BAR	0° NO.	0° LENGTH	0° WEIGHT	15° NO.	15° LENGTH	15° WEIGHT	30° NO.	30° LENGTH	30° WEIGHT	45° NO.	45° LENGTH	45° WEIGHT
SLAB LONGITUDINAL BOTTOM		8a1	58	23'-4	3614	58	23'-4	3614	58	23'-4	3614	58	23'-4	3614
SLAB LONGITUDINAL BOTTOM		8a2	58	33'-6	5188	58	33'-6	5188	58	33'-6	5188	58	33'-6	5188
SLAB LONGITUDINAL BOTTOM		8a3	58	31'-6	4879	58	31'-6	4879	58	31'-6	4879	58	31'-6	4879
SLAB LONGITUDINAL BOTTOM		9a4	58	29'-10	5884	58	29'-10	5884	58	29'-10	5884	58	29'-10	5884
SLAB LONGITUDINAL BOTTOM		9a5	29	32'-0	3156	29	32'-0	3156	29	32'-0	3156	29	32'-0	3156
SLAB LONGITUDINAL BOTTOM, AT RAIL		8a6	8	36'-10	787	8	36'-10	787	8	36'-10	787	8	36'-10	787
SLAB LONGITUDINAL BOTTOM, AT RAIL		8a7	4	37'-4	399	4	37'-4	399	4	37'-4	399	4	37'-4	399
SLAB LONGITUDINAL BOTTOM, AT RAIL		8a8	8	26'-1	558	8	26'-1	558	8	26'-1	558	8	26'-1	558
SLAB LONGITUDINAL BOTTOM, AT RAIL		8a9	4	22'-6	241	4	22'-6	241	4	22'-6	241	4	22'-6	241
SLAB LONGITUDINAL TOP		6b1	58	5'-10	509	58	5'-10	509	58	5'-10	509	58	5'-10	509
SLAB LONGITUDINAL TOP		10b2	58	26'-9	6677	58	26'-9	6677	58	26'-9	6677	58	26'-9	6677
SLAB LONGITUDINAL TOP		10b3	58	27'-6	6864	58	27'-6	6864	58	27'-6	6864	58	27'-6	6864
SLAB LONGITUDINAL TOP		7b4	58	15'-4	1818	58	15'-4	1818	58	15'-4	1818	58	15'-4	1818
SLAB LONGITUDINAL TOP		6b5	58	12'-7	1097	58	12'-7	1097	58	12'-7	1097	58	12'-7	1097
SLAB LONGITUDINAL TOP		9b6	58	22'-9	4487	58	22'-9	4487	58	22'-9	4487	58	22'-9	4487
SLAB LONGITUDINAL TOP		6b7	29	26'-10	1169	29	26'-10	1169	29	26'-10	1169	29	26'-10	1169
SLAB LONGITUDINAL TOP, AT RAIL		6b8	8	24'-4	293	8	24'-4	293	8	24'-4	293	8	24'-4	293
SLAB LONGITUDINAL TOP, AT RAIL		9b9	8	23'-6	640	8	23'-6	640	8	23'-6	640	8	23'-6	640
SLAB LONGITUDINAL TOP, AT RAIL		6b10	4	21'-0	127	4	21'-0	127	4	21'-0	127	4	21'-0	127
SLAB LONGITUDINAL TOP, AT RAIL		6b11	8	26'-4	317	8	26'-4	317	8	26'-4	317	8	26'-4	317
SLAB LONGITUDINAL TOP, AT RAIL		10b12	8	19'-0	655	8	19'-0	655	8	19'-0	655	8	19'-0	655
SLAB TRANSVERSE BOTTOM		6c1	97	25'-5	3704	97	26'-4	3837	88	25'-5	3360	78	25'-5	2978
SLAB TRANSVERSE BOTTOM		6c2	97	23'-3	3388	97	24'-1	3509	89	23'-3	3109	80	23'-3	2794
SLAB TRANSVERSE ENDS, BOTTOM		6c3	-	-	-	-	-	-	12	VARIES	267	20	VARIES	459
SLAB TRANSVERSE ENDS, BOTTOM		6c4	-	-	-	-	-	-	11	VARIES	255	20	VARIES	434
SLAB TRANSVERSE ENDS, BOTTOM		6c5	-	-	-	-	-	-	11	VARIES	213	19	VARIES	350
SLAB TRANSVERSE ENDS, BOTTOM		6c6	-	-	-	-	-	-	11	VARIES	230	18	VARIES	386
SLAB TRANSVERSE TOP		5d1	97	25'-9	2606	97	26'-8	2698	88	25'-9	2364	78	25'-9	2095
SLAB TRANSVERSE TOP		5d2	97	23'-3	2353	97	24'-1	2437	89	23'-3	2159	80	23'-3	1940
SLAB TRANSVERSE ENDS, TOP		5d3	-	-	-	-	-	-	12	VARIES	186	20	VARIES	319
SLAB TRANSVERSE ENDS, TOP		5d4	-	-	-	-	-	-	11	VARIES	177	20	VARIES	301
SLAB TRANSVERSE ENDS, TOP		5d5	-	-	-	-	-	-	11	VARIES	148	19	VARIES	243
SLAB TRANSVERSE ENDS, TOP		5d6	-	-	-	-	-	-	11	VARIES	160	18	VARIES	268
SLAB, TRANSVERSE AT ABUTMENT		8e1	20	28'-4	1513	20	29'-2	1558	20	31'-9	1696	20	37'-6	2003
SLAB, TRANSVERSE AT ABUTMENT		8e2	20	23'-4	1246	20	24'-1	1287	20	26'-9	1429	20	32'-5	1732
SLAB, HAIRPINS, AT ABUTMENT		6e3	100	6'-10	1027	100	6'-11	1039	100	7'-3	1089	100	7'-11	1190
PIER CAP HOOPS		5h1	66	7'-5	511	66	7'-5	511	88	7'-5	681	110	7'-5	851
PIER CAP ENDS		8h2	4	14'-5	154	4	14'-5	154	4	14'-5	154	4	14'-5	154
PIER CAP, BOTTOM LONGITUDINAL		8h3	8	27'-5	586	8	28'-8	613	8	31'-8	677	8	37'-10	809
PIER CAP, BOTTOM LONGITUDINAL		8h4	8	21'-11	469	8	22'-4	478	8	24'-6	524	8	29'-8	634
PIER CAP, TOP LONGITUDINAL		8h5	4	28'-2	301	4	29'-6	316	4	32'-8	349	4	38'-11	416
PIER CAP, TOP LONGITUDINAL		8h6	4	23'-5	251	4	23'-11	256	4	26'-3	281	4	31'-6	337
TOP OF SLAB, TRANSVERSE, AT RAIL		5j1	192	8'-6	1703	192	8'-6	1703	186	8'-6	1649	184	8'-6	1632
WING, VERTICAL		5m1-4	32	SHOWN	117	32	SHOWN	117	32	SHOWN	117	32	SHOWN	117
WING, HORIZONTAL		5n1	24	6'-8	167	24	6'-8	167	24	6'-8	167	24	6'-8	167
PAVING SUPPORT, TRANSVERSE		5p1	44	8'-10	406	46	8'-10	424	50	8'-10	461	62	8'-10	572
PAVING SUPPORT LONGITUDINAL		5p3	6	24'-9	155	6	26'-1	164	6	28'-9	180	6	34'-7	217
PAVING SUPPORT LONGITUDINAL		5p4	6	22'-0	138	6	22'-10	143	6	25'-5	160	6	31'-1	195
SUB TOTAL - LBS.					70,154			70,770			71,601			72,952
BARRIER RAIL - SEE LIST ON RAIL SHEET J44-46-06					6153			6153			6153			6153
OPEN RAIL - SEE LIST ON RAIL SHEET J44-49-06					6182			6182			6182			6182
TOTAL - LBS.	WITH MONOLITHIC PIER CAP	WITH BARRIER RAIL			76,307			76,923			77,754			79,105
		WITH OPEN RAIL			76,336			76,952			77,783			79,134
TOTAL - LBS.	WITH NON-MONOLITHIC PIER CAP	WITH BARRIER RAIL			74,035			74,595			75,088			75,904
SAME AS ABOVE EXCEPT ALL "h" BARS DELETED		WITH OPEN RAIL			74,064			74,624			75,117			75,933

ESTIMATED QUANTITIES FOR SUPERSTRUCTURE - 100' BRIDGE

ITEM		SKEW	WITH MONOLITHIC PIER CAP 0°	15°	30°	45°	WITH NON-MONOLITHIC PIER CAP 0°	15°	30°	45°
WITH BARRIER RAIL	*STRUCTURAL CONCRETE (BRIDGE)	C.Y.	301.0	302.5	307.6	318.6	294.6	295.9	300.2	309.7
	REINFORCING STEEL EPOXY COATED	LBS.	76,307	76,923	77,754	79,105	74,035	74,595	75,088	75,904
	CONCRETE BARRIER OR OPEN RAIL	LIN. FT.	222.0	222.2	222.9	224.5	222.0	222.2	222.9	224.5
WITH OPEN RAIL	*STRUCTURAL CONCRETE (BRIDGE)	C.Y.	300.8	302.3	307.4	318.4	294.4	295.7	300.0	309.5
	REINFORCING STEEL EPOXY COATED	LBS.	76,336	76,952	77,783	79,134	74,064	74,624	75,117	75,933

* INCLUDES 4 WINGS @ 0.71 C.Y. EACH; EXCLUDES RAIL CONCRETE.

BENT BAR DETAILS

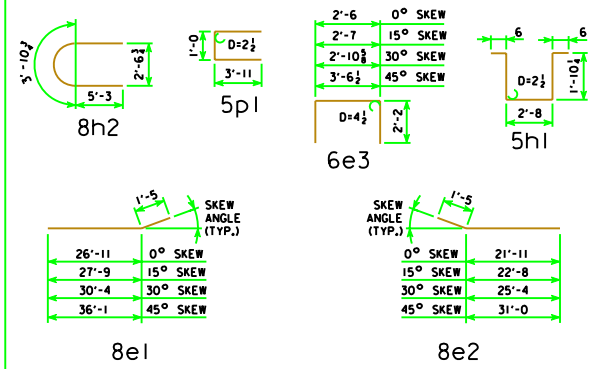

NOTE: ALL DIMENSIONS ARE OUT TO OUT. D = PIN DIAMETER.

NOTES:

ALL REINFORCING STEEL SHALL BE EPOXY COATED.

THE TRANSVERSE REBARS ARE DETAILED WITH A SPLICE LAP. AT THE CONTRACTOR'S OPTION, THIS LAP MAY BE ELIMINATED BY FURNISHING FULL LENGTH BARS WITH NO REDUCTION IN PAY WEIGHT FOR SAME.

LATEST REVISION DATE

APPROVED BY BRIDGE ENGINEER

Iowa Department of Transportation
Highway Division

STANDARD DESIGN - 44' ROADWAY, 3 SPAN BRIDGES

CONTINUOUS CONCRETE SLAB BRIDGES

NOVEMBER, 2006

SUPERSTRUCTURE DETAILS 100'-0 BRIDGE

J44-09-06