BILL OF REINFORCING STEEL - ONE ABUTMENT - 0° SKEW

BRIDGE LENGTH				70'-0		80'-0		90'-0		100'-0		110'-0		120'-0		130'-0		140'-0		150'-0	
MARK	LOCATION	SHAPE	LENGTH	NO.	WEIGHT	NO.	WEIGHT	NO.	WEIGHT	NO.	WEIGHT	NO.	WEIGHT	NO.	WEIGHT	NO.	WEIGHT	NO.	WEIGHT	NO.	WEIGHT
5s1	ABUTMENT FOOTING HOOPS		11'-0	46	528	46	528	46	528	46	528	46	528	46	528	46	528	44	505	44	505
5p2	PAVING SUPPORT TRANSVERSE		9'-4	22	214	22	214	22	214	22	214	22	214	22	214	22	214	22	214	22	214
4p5	PAVING SUPPORT TRANSVERSE		1'-11	22	28	22	28	22	28	22	28	22	28	22	28	22	28	22	28	22	28
5p6	PAVING SUPPORT LONGITUDINAL		24'-8	2	51	2	51	2	51	2	51	2	51	2	51	2	51	2	51	2	51
5p7	PAVING SUPPORT LONGITUDINAL		22'-0	2	46	2	46	2	46	2	46	2	46	2	46	2	46	2	46	2	46
8r1	ABUTMENT FOOTING LONGITUDINAL		28'-4	7	530	7	530	7	530	7	530	7	530	7	530	7	530	7	530	7	530
8r2	ABUTMENT FOOTING LONGITUDINAL		23'-4	7	436	7	436	7	436	7	436	7	436	7	436	7	436	7	436	7	436
6t1	FOOTING TO SLAB DOWELS		3'-11	100	588	100	588	100	588	100	588	100	588	100	588	100	588	100	588	100	588
*5u1	WING LONGITUDINAL		6'-8	12	83	12	83	12	83	12	83	12	83	12	83	12	83	12	83	12	83
*2	PILE SPIRAL		38'-6	7	45	7	45	7	45	7	45	7	45	7	45	8	51	9	58	9	58
	SPIRAL SPACERS - L 7/8 X 7/8 X 1/8 X 0.70		1'-10	14	18	14	18	14	18	14	18	14	18	14	18	16	21	18	23	18	23
REINFORCING STEEL EPOXY COATED - TOTAL (LBS.)					2567		2567		2567		2567		2567		2567		2576		2562		2562

BILL OF REINFORCING STEEL - ONE ABUTMENT - 15° SKEW

BRIDGE LENGTH				70'-0		80'-0		90'-0		100'-0		110'-0		120'-0		130'-0		140'-0		150'-0	
MARK	LOCATION	SHAPE	LENGTH	NO.	WEIGHT	NO.	WEIGHT	NO.	WEIGHT	NO.	WEIGHT	NO.	WEIGHT	NO.	WEIGHT	NO.	WEIGHT	NO.	WEIGHT	NO.	WEIGHT
5p2	PAVING SUPPORT TRANSVERSE		9'-4	23	224	23	224	23	224	23	224	23	224	23	224	23	224	23	224	23	224
4p5	PAVING SUPPORT TRANSVERSE		1'-11	23	29	23	29	23	29	23	29	23	29	23	29	23	29	23	29	23	29
5p6	PAVING SUPPORT LONGITUDINAL		25'-6	2	53	2	53	2	53	2	53	2	53	2	53	2	53	2	53	2	53
5p7	PAVING SUPPORT LONGITUDINAL		22'-9	2	47	2	47	2	47	2	47	2	47	2	47	2	47	2	47	2	47
8r1	ABUTMENT FOOTING LONGITUDINAL		29'-2	7	545	7	545	7	545	7	545	7	545	7	545	7	545	7	545	7	545
8r2	ABUTMENT FOOTING LONGITUDINAL		24'-1	7	450	7	450	7	450	7	450	7	450	7	450	7	450	7	450	7	450
5s1	ABUTMENT FOOTING HOOPS		11'-0	42	482	42	482	42	482	42	482	42	482	42	482	42	482	40	459	40	459
5s2	ABUTMENT FOOTING HOOPS		11'-3	4	47	4	47	4	47	4	47	4	47	4	47	4	47	4	47	4	47
6t1	FOOTING TO SLAB DOWELS		3'-11	100	588	100	588	100	588	100	588	100	588	100	588	100	588	100	588	100	588
*5u1	WING LONGITUDINAL		6'-8	12	83	12	83	12	83	12	83	12	83	12	83	12	83	12	83	12	83
*2	PILE SPIRAL		38'-6	7	45	7	45	7	45	7	45	7	45	7	45	8	51	9	58	9	58
	SPIRAL SPACERS - L 7/8 X 7/8 X 1/8 X 0.70		1'-10	14	18	14	18	14	18	14	18	14	18	14	18	16	21	18	23	18	23
REINFORCING STEEL EPOXY COATED - TOTAL (LBS.)					2611		2611		2611		2611		2611		2611		2620		2606		2606

BILL OF REINFORCING STEEL - ONE ABUTMENT - 30° SKEW

BRIDGE LENGTH				70'-0		80'-0		90'-0		100'-0		110'-0		120'-0		130'-0		140'-0		150'-0	
MARK	LOCATION	SHAPE	LENGTH	NO.	WEIGHT	NO.	WEIGHT	NO.	WEIGHT	NO.	WEIGHT	NO.	WEIGHT	NO.	WEIGHT	NO.	WEIGHT	NO.	WEIGHT	NO.	WEIGHT
5s1	ABUTMENT FOOTING HOOPS		11'-0	49	562	49	562	49	562	49	562	49	562	49	562	49	562	45	516	45	516
5s2	ABUTMENT FOOTING HOOPS		11'-11	4	50	4	50	4	50	4	50	4	50	4	50	4	50	4	50	4	50
5p2	PAVING SUPPORT TRANSVERSE		9'-4	25	243	25	243	25	243	25	243	25	243	25	243	25	243	25	243	25	243
4p5	PAVING SUPPORT TRANSVERSE		1'-11	25	32	25	32	25	32	25	32	25	32	25	32	25	32	25	32	25	32
5p6	PAVING SUPPORT LONGITUDINAL		28'-2	2	59	2	59	2	59	2	59	2	59	2	59	2	59	2	59	2	59
5p7	PAVING SUPPORT LONGITUDINAL		25'-5	2	53	2	53	2	53	2	53	2	53	2	53	2	53	2	53	2	53
8r1	ABUTMENT FOOTING LONGITUDINAL		31'-9	7	593	7	593	7	593	7	593	7	593	7	593	7	593	7	593	7	593
8r2	ABUTMENT FOOTING LONGITUDINAL		26'-9	7	500	7	500	7	500	7	500	7	500	7	500	7	500	7	500	7	500
6t1	FOOTING TO SLAB DOWELS		3'-11	100	588	100	588	100	588	100	588	100	588	100	588	100	588	100	588	100	588
*5u1	WING LONGITUDINAL		6'-8	12	83	12	83	12	83	12	83	12	83	12	83	12	83	12	83	12	83
*2	PILE SPIRAL		38'-6	8	51	8	51	8	51	8	51	8	51	8	51	8	51	10	64	10	64
	SPIRAL SPACERS - L 7/8 X 7/8 X 1/8 X 0.70		1'-10	16	21	16	21	16	21	16	21	16	21	16	21	16	21	20	26	20	26
REINFORCING STEEL EPOXY COATED - TOTAL (LBS.)					2835		2835		2835		2835		2835		2835		2835		2807		2807

BILL OF REINFORCING STEEL - ONE ABUTMENT - 45° SKEW

BRIDGE LENGTH				70'-0		80'-0		90'-0		100'-0		110'-0		120'-0		130'-0		140'-0		150'-0	
MARK	LOCATION	SHAPE	LENGTH	NO.	WEIGHT	NO.	WEIGHT	NO.	WEIGHT	NO.	WEIGHT	NO.	WEIGHT	NO.	WEIGHT	NO.	WEIGHT	NO.	WEIGHT	NO.	WEIGHT
5p2	PAVING SUPPORT TRANSVERSE		9'-4	31	302	31	302	31	302	31	302	31	302	31	302	31	302	31	302	31	302
4p5	PAVING SUPPORT TRANSVERSE		1'-11	31	40	31	40	31	40	31	40	31	40	31	40	31	40	31	40	31	40
5p6	PAVING SUPPORT LONGITUDINAL		33'-10	2	71	2	71	2	71	2	71	2	71	2	71	2	71	2	71	2	71
5p7	PAVING SUPPORT LONGITUDINAL		31'-1	2	65	2	65	2	65	2	65	2	65	2	65	2	65	2	65	2	65
8r1	ABUTMENT FOOTING LONGITUDINAL		37'-6	7	701	7	701	7	701	7	701	7	701	7	701	7	701	7	701	7	701
8r2	ABUTMENT FOOTING LONGITUDINAL		32'-5	7	606	7	606	7	606	7	606	7	606	7	606	7	606	7	606	7	606
5s1	ABUTMENT FOOTING HOOPS		11'-0	56	642	56	642	54	620	54	620	60	688	60	688	55	631	52	597	52	597
5s2	ABUTMENT FOOTING HOOPS		13'-6	4	56	4	56	4	56	4	56	4	56	4	56	4	56	4	56	4	56
6t1	FOOTING TO SLAB DOWELS		3'-11	100	588	100	588	100	588	100	588	100	588	100	588	100	588	100	588	100	588
*5u1	WING LONGITUDINAL		6'-8	12	83	12	83	12	83	12	83	12	83	12	83	12	83	12	83	12	83
*2	PILE SPIRAL		38'-6	9	58	9	58	10	64	10	64	11	71	11	71	12	77	14	90	14	90
	SPIRAL SPACERS - L 7/8 X 7/8 X 1/8 X 0.70		1'-10	18	23	18	23	20	26	20	26	22	28	22	28	24	31	28	36	28	36
REINFORCING STEEL EPOXY COATED - TOTAL (LBS.)					3235		3235		3222		3222		3299		3299		3251		3235		3235

* SEE SHEET J44-20-06 FOR SPACING

NOTE: THE PILE SPIRALS AND SPIRAL SPACERS ARE TO BE NON-COATED REINFORCING BUT MAY BE EPOXY COATED AT THE CONTRACTORS OPTION AND EXPENSE.

ESTIMATED QUANTITIES - ONE ABUT. - 0° SKEW

LOCATION	UNIT	QUANTITY								
BRIDGE LENGTH		70'-0	80'-0	90'-0	100'-0	110'-0	120'-0	130'-0	140'-0	150'-0
STRUCTURAL CONCRETE (BRIDGE)	C.Y.	17.5	17.5	17.5	17.5	17.5	17.5	17.5	17.5	17.5
REINFORCING STEEL EPOXY COATED	LBS.	2567	2567	2567	2567	2567	2567	2576	2562	2562
STEEL PILING HP 10 X 42	NO.	7	7	7	7	7	7	8	9	9
PREBORE HOLES	FT.	-	-	-	-	-	-	-	90	90

ESTIMATED QUANTITIES - ONE ABUT. - 15° SKEW

LOCATION	UNIT	QUANTITY								
BRIDGE LENGTH		70'-0	80'-0	90'-0	100'-0	110'-0	120'-0	130'-0	140'-0	150'-0
STRUCTURAL CONCRETE (BRIDGE)	C.Y.	18.1	18.1	18.1	18.1	18.1	18.1	18.1	18.1	18.1
REINFORCING STEEL EPOXY COATED	LBS.	2611	2611	2611	2611	2611	2611	2620	2606	2606
STEEL PILING HP 10 X 42	NO.	7	7	7	7	7	7	8	9	9
PREBORE HOLES	FT.	-	-	-	-	-	-	-	90	90

ESTIMATED QUANTITIES - ONE ABUT. - 30° SKEW

LOCATION	UNIT	QUANTITY								
BRIDGE LENGTH		70'-0	80'-0	90'-0	100'-0	110'-0	120'-0	130'-0	140'-0	150'-0
STRUCTURAL CONCRETE (BRIDGE)	C.Y.	20.2	20.2	20.2	20.2	20.2	20.2	20.2	20.2	20.2
REINFORCING STEEL EPOXY COATED	LBS.	2835	2835	2835	2835	2835	2835	2835	2807	2807
STEEL PILING HP 10 X 42	NO.	8	8	8	8	8	8	8	10	10
PREBORE HOLES	FT.	-	-	-	-	-	-	-	100	100

ESTIMATED QUANTITIES - ONE ABUT. - 45° SKEW

LOCATION	UNIT	QUANTITY								
BRIDGE LENGTH		70'-0	80'-0	90'-0	100'-0	110'-0	120'-0	130'-0	140'-0	150'-0
STRUCTURAL CONCRETE (BRIDGE)	C.Y.	24.8	24.8	24.8	24.8	24.8	24.8	24.8	24.8	24.8
REINFORCING STEEL EPOXY COATED	LBS.	3235	3235	3222	3222	3299	3299	3251	3235	3235
STEEL PILING HP 10 X 42	NO.	9	9	10	10	11	11	12	14	14
PREBORE HOLES	FT.	-	-	-	-	-	-	-	140	140

BENT BAR DETAILS

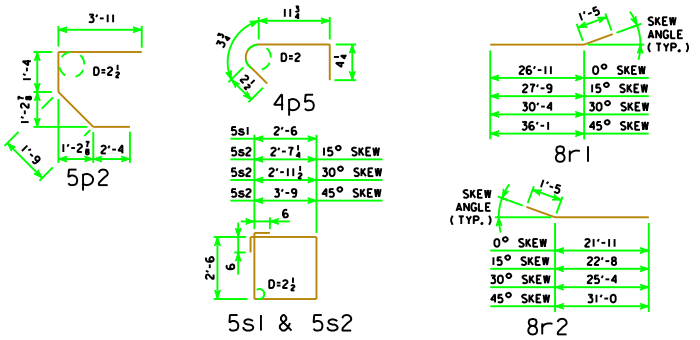

NOTE: DIMENSIONS ARE OUT TO OUT. D = PIN DIAMETER.

LATEST REVISION DATE

APPROVED BY BRIDGE ENGINEER

Iowa Department of Transportation
Highway Division

STANDARD DESIGN - 44' ROADWAY, 3 SPAN BRIDGES

CONTINUOUS CONCRETE SLAB BRIDGES

NOVEMBER, 2006

ABUTMENT DETAILS
STEEL PILING

J44-44-06