BILL OF REINFORCING STEEL FOR SUPERSTRUCTURE - 150' BRIDGE

LOCATION	SHAPE	BAR	0° NO.	0° LENGTH	0° WEIGHT	15° NO.	15° LENGTH	15° WEIGHT	30° NO.	30° LENGTH	30° WEIGHT	45° NO.	45° LENGTH	45° WEIGHT
SLAB LONGITUDINAL BOTTOM		10a1	58	33'-10	8444	58	33'-10	8444	58	33'-10	8444	58	33'-10	8444
SLAB LONGITUDINAL BOTTOM		10a2	58	51'-6	12,854	58	51'-6	12,854	58	51'-6	12,854	58	51'-6	12,854
SLAB LONGITUDINAL BOTTOM		10a3	58	48'-6	12,105	58	48'-6	12,105	58	48'-6	12,105	58	48'-6	12,105
SLAB LONGITUDINAL BOTTOM		9a4	58	37'-4	7363	58	37'-4	7363	58	37'-4	7363	58	37'-4	7363
SLAB LONGITUDINAL BOTTOM		9a5	29	45'-0	4437	29	45'-0	4437	29	45'-0	4437	29	45'-0	4437
SLAB LONGITUDINAL BOTTOM, AT RAIL		9a6	8	45'-8	1243	8	45'-8	1243	8	45'-8	1243	8	45'-8	1243
SLAB LONGITUDINAL BOTTOM, AT RAIL		9a7	8	13'-0	354	8	13'-0	354	8	13'-0	354	8	13'-0	354
SLAB LONGITUDINAL BOTTOM, AT RAIL		9a8	4	56'-8	771	4	56'-8	771	4	56'-8	771	4	56'-8	771
SLAB LONGITUDINAL BOTTOM, AT RAIL		10a9	8	38'-7	1329	8	38'-7	1329	8	38'-7	1329	8	38'-7	1329
SLAB LONGITUDINAL BOTTOM, AT RAIL		10a10	4	35'-0	603	4	35'-0	603	4	35'-0	603	4	35'-0	603
SLAB LONGITUDINAL TOP		6b1	58	6'-7	574	58	6'-7	574	58	6'-7	574	58	6'-7	574
SLAB LONGITUDINAL TOP		11b2	58	32'-9	10,093	58	32'-9	10,093	58	32'-9	10,093	58	32'-9	10,093
SLAB LONGITUDINAL TOP		11b3	58	28'-6	8783	58	28'-6	8783	58	28'-6	8783	58	28'-6	8783
SLAB LONGITUDINAL TOP		8b4	58	32'-0	4956	58	32'-0	4956	58	32'-0	4956	58	32'-0	4956
SLAB LONGITUDINAL TOP		11b5	58	30'-0	9245	58	30'-0	9245	58	30'-0	9245	58	30'-0	9245
SLAB LONGITUDINAL TOP		6b6	29	37'-4	1627	29	37'-4	1627	29	37'-4	1627	29	37'-4	1627
SLAB LONGITUDINAL TOP, AT RAIL		6b8	8	33'-10	407	8	33'-10	407	8	33'-10	407	8	33'-10	407
SLAB LONGITUDINAL TOP, AT RAIL		11b9	8	35'-6	1509	8	35'-6	1509	8	35'-6	1509	8	35'-6	1509
SLAB LONGITUDINAL TOP, AT RAIL		6b10	4	28'-0	169	4	28'-0	169	4	28'-0	169	4	28'-0	169
SLAB LONGITUDINAL TOP, AT RAIL		7b11	8	39'-7	648	8	39'-7	648	8	39'-7	648	8	39'-7	648
SLAB LONGITUDINAL TOP, AT RAIL		11b12	8	25'-6	1084	8	25'-6	1084	8	25'-6	1084	8	25'-6	1084
SLAB TRANSVERSE BOTTOM		6c1	147	25'-5	5612	147	26'-4	5815	138	25'-5	5269	128	25'-5	4887
SLAB TRANSVERSE BOTTOM		6c2	147	23'-3	5134	147	24'-1	5318	139	23'-3	4855	130	23'-3	4540
SLAB TRANSVERSE ENDS, BOTTOM		6c3	-	-	-	-	-	-	12	VARIES	267	20	VARIES	459
SLAB TRANSVERSE ENDS, BOTTOM		6c4	-	-	-	-	-	-	11	VARIES	255	20	VARIES	434
SLAB TRANSVERSE ENDS, BOTTOM		6c5	-	-	-	-	-	-	11	VARIES	213	19	VARIES	350
SLAB TRANSVERSE ENDS, BOTTOM		6c6	-	-	-	-	-	-	11	VARIES	230	18	VARIES	386
SLAB TRANSVERSE TOP		5d1	147	25'-9	3949	147	26'-8	4089	138	25'-9	3707	128	25'-9	3438
SLAB TRANSVERSE TOP		5d2	147	23'-3	3565	147	24'-1	3693	139	23'-3	3371	130	23'-3	3153
SLAB TRANSVERSE ENDS, TOP		5d3	-	-	-	-	-	-	12	VARIES	186	20	VARIES	319
SLAB TRANSVERSE ENDS, TOP		5d4	-	-	-	-	-	-	11	VARIES	177	20	VARIES	301
SLAB TRANSVERSE ENDS, TOP		5d5	-	-	-	-	-	-	11	VARIES	148	19	VARIES	243
SLAB TRANSVERSE ENDS, TOP		5d6	-	-	-	-	-	-	11	VARIES	160	18	VARIES	268
SLAB, TRANSVERSE AT ABUTMENT		8e1	20	28'-4	1513	20	29'-2	1558	20	31'-9	1696	20	37'-6	2003
SLAB, TRANSVERSE AT ABUTMENT		8e2	20	23'-4	1246	20	24'-1	1287	20	26'-9	1429	20	32'-5	1732
SLAB, HAIRPINS, AT ABUTMENT		6e3	100	6'-10	1027	100	6'-11	1039	100	7'-3	1089	100	7'-11	1190
PIER CAP HOOPS		5h1	68	8'-6	603	68	8'-6	603	68	8'-6	603	102	8'-6	905
PIER CAP ENDS		8h2	4	14'-5	154	4	14'-5	154	4	14'-5	154	4	14'-5	154
PIER CAP, BOTTOM LONGITUDINAL		8h3	8	27'-5	586	8	28'-8	613	8	31'-8	677	8	37'-10	809
PIER CAP, BOTTOM LONGITUDINAL		8h4	8	21'-11	469	8	22'-4	478	8	24'-6	524	8	29'-8	634
PIER CAP, TOP LONGITUDINAL		8h5	4	28'-2	301	4	29'-6	316	4	32'-8	349	4	38'-11	416
PIER CAP, TOP LONGITUDINAL		8h6	4	23'-5	251	4	23'-11	256	4	26'-3	281	4	31'-6	337
TOP OF SLAB, TRANSVERSE, AT RAIL		5j1	292	8'-6	2589	292	8'-6	2589	286	8'-6	2536	284	8'-6	2518
WING, VERTICAL		5m1-4	32	SHOWN	117	32	SHOWN	117	32	SHOWN	117	32	SHOWN	117
WING, HORIZONTAL		5n1	24	6'-8	167	24	6'-8	167	24	6'-8	167	24	6'-8	167
PAVING SUPPORT, TRANSVERSE		5p1	44	8'-10	406	46	8'-10	424	50	8'-10	461	62	8'-10	572
PAVING SUPPORT LONGITUDINAL		5p3	6	24'-9	155	6	26'-1	164	6	28'-9	180	6	34'-7	217
PAVING SUPPORT LONGITUDINAL		5p4	6	22'-0	138	6	22'-10	143	6	25'-5	160	6	31'-1	195
SUB TOTAL - LBS.					116,580			117,421			117,859			119,342
BARRIER RAIL - SEE LIST ON RAIL SHEET J44-46-06					8853			8853			8853			8853
OPEN RAIL - SEE LIST ON RAIL SHEET J44-49-06					8675			8675			8675			8675
TOTAL - LBS. WITH MONOLITHIC PIER CAP		WITH BARRIER RAIL			125,433			126,274			126,712			128,195
		WITH OPEN RAIL			125,255			126,096			126,534			128,017
TOTAL - LBS. WITH NON-MONOLITHIC PIER CAP		WITH BARRIER RAIL			123,069			123,854			124,124			124,940
SAME AS ABOVE EXCEPT ALL "h" BARS DELETED		WITH OPEN RAIL			122,891			123,676			123,946			124,762

ESTIMATED QUANTITIES FOR SUPERSTRUCTURE - 150' BRIDGE

ITEM		SKEW	WITH MONOLITHIC PIER CAP 0°	15°	30°	45°	WITH NON-MONOLITHIC PIER CAP 0°	15°	30°	45°
WITH BARRIER RAIL	*STRUCTURAL CONCRETE (BRIDGE)	C.Y.	567.5	568.9	573.7	584.0	561.2	562.3	566.4	575.1
	REINFORCING STEEL EPOXY COATED	LBS.	125,433	126,274	126,712	128,195	123,069	123,854	124,124	124,940
	CONCRETE BARRIER OR OPEN RAIL	LIN. FT.	322.0	322.2	322.9	324.5	322.0	322.2	322.9	324.5
WITH OPEN RAIL	*STRUCTURAL CONCRETE (BRIDGE)	C.Y.	567.3	568.7	573.4	583.7	560.9	562.1	566.1	574.8
	REINFORCING STEEL EPOXY COATED	LBS.	125,255	126,096	126,534	128,017	122,891	123,676	123,946	124,762

* INCLUDES 4 WINGS @ 0.71 C.Y. EACH; EXCLUDES RAIL CONCRETE.

BENT BAR DETAILS

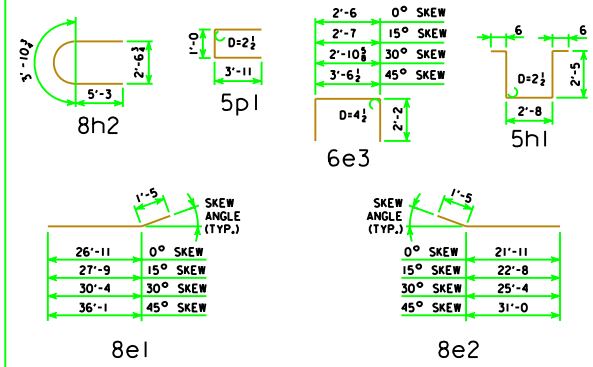

NOTE: ALL DIMENSIONS ARE OUT TO OUT. D = PIN DIAMETER.

NOTES:

ALL REINFORCING STEEL SHALL BE EPOXY COATED.

THE TRANSVERSE REBARS ARE DETAILED WITH A SPLICE LAP. AT THE CONTRACTOR'S OPTION, THIS LAP MAY BE ELIMINATED BY FURNISHING FULL LENGTH BARS WITH NO REDUCTION IN PAY WEIGHT FOR SAME.

LATEST REVISION DATE

APPROVED BY BRIDGE ENGINEER

Iowa Department of Transportation
Highway Division

STANDARD DESIGN - 44' ROADWAY, 3 SPAN BRIDGES

CONTINUOUS CONCRETE SLAB BRIDGES

NOVEMBER, 2006

SUPERSTRUCTURE DETAILS 150'-0 BRIDGE

J44-19-06