BILL OF REINFORCING STEEL FOR SUPERSTRUCTURE - 140' BRIDGE

LOCATION	SHAPE	BAR	0° NO.	0° LENGTH	0° WEIGHT	15° NO.	15° LENGTH	15° WEIGHT	30° NO.	30° LENGTH	30° WEIGHT	45° NO.	45° LENGTH	45° WEIGHT
SLAB LONGITUDINAL BOTTOM		9a1	58	31'-7	6229	58	31'-7	6229	58	31'-7	6229	58	31'-7	6229
SLAB LONGITUDINAL BOTTOM		10a2	58	48'-6	12,105	58	48'-6	12,105	58	48'-6	12,105	58	48'-6	12,105
SLAB LONGITUDINAL BOTTOM		9a3	58	43'-9	8628	58	43'-9	8628	58	43'-9	8628	58	43'-9	8628
SLAB LONGITUDINAL BOTTOM		10a4	58	36'-4	9068	58	36'-4	9068	58	36'-4	9068	58	36'-4	9068
SLAB LONGITUDINAL BOTTOM		9a5	29	43'-0	4240	29	43'-0	4240	29	43'-0	4240	29	43'-0	4240
SLAB LONGITUDINAL BOTTOM, AT RAIL		9a6	8	42'-8	1161	8	42'-8	1161	8	42'-8	1161	8	42'-8	1161
SLAB LONGITUDINAL BOTTOM, AT RAIL		9a7	8	13'-0	354	8	13'-0	354	8	13'-0	354	8	13'-0	354
SLAB LONGITUDINAL BOTTOM, AT RAIL		9a8	4	52'-8	717	4	52'-8	717	4	52'-8	717	4	52'-8	717
SLAB LONGITUDINAL BOTTOM, AT RAIL		9a9	8	35'-4	962	8	35'-4	962	8	35'-4	962	8	35'-4	962
SLAB LONGITUDINAL BOTTOM, AT RAIL		10a10	4	33'-0	568	4	33'-0	568	4	33'-0	568	4	33'-0	568
SLAB LONGITUDINAL TOP		6b1	58	6'-7	574	58	6'-7	574	58	6'-7	574	58	6'-7	574
SLAB LONGITUDINAL TOP		11b2	58	26'-0	8013	58	26'-0	8013	58	26'-0	8013	58	26'-0	8013
SLAB LONGITUDINAL TOP		11b3	58	31'-9	9784	58	31'-9	9784	58	31'-9	9784	58	31'-9	9784
SLAB LONGITUDINAL TOP		7b4	58	24'-4	2885	58	24'-4	2885	58	24'-4	2885	58	24'-4	2885
SLAB LONGITUDINAL TOP		11b5	58	29'-0	8937	58	29'-0	8937	58	29'-0	8937	58	29'-0	8937
SLAB LONGITUDINAL TOP		6b6	29	34'-4	1496	29	34'-4	1496	29	34'-4	1496	29	34'-4	1496
SLAB LONGITUDINAL TOP, AT RAIL		6b8	8	31'-7	380	8	31'-7	380	8	31'-7	380	8	31'-7	380
SLAB LONGITUDINAL TOP, AT RAIL		11b9	8	34'-0	1446	8	34'-0	1446	8	34'-0	1446	8	34'-0	1446
SLAB LONGITUDINAL TOP, AT RAIL		6b10	4	25'-6	154	4	25'-6	154	4	25'-6	154	4	25'-6	154
SLAB LONGITUDINAL TOP, AT RAIL		7b11	8	37'-1	607	8	37'-1	607	8	37'-1	607	8	37'-1	607
SLAB LONGITUDINAL TOP, AT RAIL		11b12	8	24'-3	1031	8	24'-3	1031	8	24'-3	1031	8	24'-3	1031
SLAB TRANSVERSE BOTTOM		6c1	137	25'-5	5231	137	26'-4	5419	128	25'-5	4887	118	25'-5	4505
SLAB TRANSVERSE BOTTOM		6c2	137	23'-3	4785	137	24'-1	4956	129	23'-3	4505	120	23'-3	4191
SLAB TRANSVERSE ENDS, BOTTOM		6c3	-	-	-	-	-	-	12	VARIES	267	20	VARIES	459
SLAB TRANSVERSE ENDS, BOTTOM		6c4	-	-	-	-	-	-	11	VARIES	255	20	VARIES	434
SLAB TRANSVERSE ENDS, BOTTOM		6c5	-	-	-	-	-	-	11	VARIES	213	19	VARIES	350
SLAB TRANSVERSE ENDS, BOTTOM		6c6	-	-	-	-	-	-	11	VARIES	230	18	VARIES	386
SLAB TRANSVERSE TOP		5d1	137	25'-9	3680	137	26'-8	3811	128	25'-9	3438	118	25'-9	3170
SLAB TRANSVERSE TOP		5d2	137	23'-3	3323	137	24'-1	3442	129	23'-3	3129	120	23'-3	2910
SLAB TRANSVERSE ENDS, TOP		5d3	-	-	-	-	-	-	12	VARIES	186	20	VARIES	319
SLAB TRANSVERSE ENDS, TOP		5d4	-	-	-	-	-	-	11	VARIES	177	20	VARIES	301
SLAB TRANSVERSE ENDS, TOP		5d5	-	-	-	-	-	-	11	VARIES	148	19	VARIES	243
SLAB TRANSVERSE ENDS, TOP		5d6	-	-	-	-	-	-	11	VARIES	160	18	VARIES	268
SLAB, TRANSVERSE AT ABUTMENT		8e1	20	28'-4	1513	20	29'-2	1558	20	31'-9	1696	20	37'-6	2003
SLAB, TRANSVERSE AT ABUTMENT		8e2	20	23'-4	1246	20	24'-1	1287	20	26'-9	1429	20	32'-5	1732
SLAB, HAIRPINS, AT ABUTMENT		6e3	100	6'-10	1027	100	6'-11	1039	100	7'-3	1089	100	7'-11	1190
PIER CAP HOOPS		5h1	64	8'-3	551	64	8'-3	551	96	8'-3	827	96	8'-3	827
PIER CAP ENDS		8h2	4	14'-5	154	4	14'-5	154	4	14'-5	154	4	14'-5	154
PIER CAP, BOTTOM LONGITUDINAL		8h3	8	27'-5	586	8	28'-8	613	8	31'-8	677	8	37'-10	809
PIER CAP, BOTTOM LONGITUDINAL		8h4	8	21'-11	469	8	22'-4	478	8	24'-6	524	8	29'-8	634
PIER CAP, TOP LONGITUDINAL		8h5	4	28'-2	301	4	29'-6	316	4	32'-8	349	4	38'-11	416
PIER CAP, TOP LONGITUDINAL		8h6	4	23'-5	251	4	23'-11	256	4	26'-3	281	4	31'-6	337
TOP OF SLAB, TRANSVERSE, AT RAIL		5j1	272	8'-6	2412	272	8'-6	2412	266	8'-6	2359	264	8'-6	2341
WING, VERTICAL		5m1-4	32	SHOWN	117	32	SHOWN	117	32	SHOWN	117	32	SHOWN	117
WING, HORIZONTAL		5n1	24	6'-8	167	24	6'-8	167	24	6'-8	167	24	6'-8	167
PAVING SUPPORT, TRANSVERSE		5p1	44	8'-10	406	46	8'-10	424	50	8'-10	461	62	8'-10	572
PAVING SUPPORT LONGITUDINAL		5p3	6	24'-9	155	6	26'-1	164	6	28'-9	180	6	34'-7	217
PAVING SUPPORT LONGITUDINAL		5p4	6	22'-0	138	6	22'-10	143	6	25'-5	160	6	31'-1	195
SUB TOTAL - LBS.					105,851			106,646			107,404			108,586
BARRIER RAIL - SEE LIST ON RAIL SHEET J44-46-06					8294			8294			8294			8294
OPEN RAIL - SEE LIST ON RAIL SHEET J44-49-06					8189			8189			8189			8189
TOTAL - LBS. WITH MONOLITHIC PIER CAP		WITH BARRIER RAIL			114,145			114,940			115,698			116,880
		WITH OPEN RAIL			114,040			114,835			115,593			116,775
TOTAL - LBS. WITH NON-MONOLITHIC PIER CAP		WITH BARRIER RAIL			111,833			112,572			112,886			113,703
SAME AS ABOVE EXCEPT ALL "h" BARS DELETED		WITH OPEN RAIL			111,728			112,467			112,781			113,598

BENT BAR DETAILS

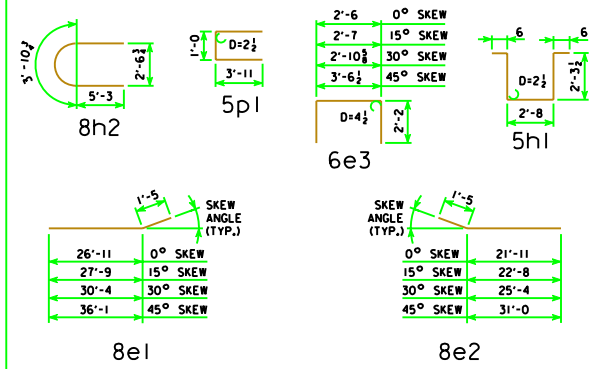

NOTE: ALL DIMENSIONS ARE OUT TO OUT. D = PIN DIAMETER.

NOTES:

ALL REINFORCING STEEL SHALL BE EPOXY COATED.

THE TRANSVERSE REBARS ARE DETAILED WITH A SPLICE LAP. AT THE CONTRACTOR'S OPTION, THIS LAP MAY BE ELIMINATED BY FURNISHING FULL LENGTH BARS WITH NO REDUCTION IN PAY WEIGHT FOR SAME.

ESTIMATED QUANTITIES FOR SUPERSTRUCTURE - 140' BRIDGE

ITEM		SKEW	WITH MONOLITHIC PIER CAP 0°	15°	30°	45°	WITH NON-MONOLITHIC PIER CAP 0°	15°	30°	45°
WITH BARRIER RAIL	*STRUCTURAL CONCRETE (BRIDGE)	C.Y.	502.7	504.1	508.9	519.4	496.3	497.5	501.6	510.5
	REINFORCING STEEL EPOXY COATED	LBS.	114,145	114,940	115,698	116,880	111,833	112,572	112,886	113,703
CONCRETE BARRIER OR OPEN RAIL		LIN. FT.	302.0	302.2	302.9	304.5	302.0	302.2	302.9	304.5
WITH OPEN RAIL	*STRUCTURAL CONCRETE (BRIDGE)	C.Y.	502.4	503.8	508.7	519.1	496.0	497.2	501.3	510.2
	REINFORCING STEEL EPOXY COATED	LBS.	114,040	114,835	115,593	116,775	111,728	112,467	112,781	113,598

* INCLUDES 4 WINGS @ 0.71 C.Y. EACH; EXCLUDES RAIL CONCRETE.

LATEST REVISION DATE

APPROVED BY BRIDGE ENGINEER

Iowa Department of Transportation
Highway Division

STANDARD DESIGN - 44' ROADWAY, 3 SPAN BRIDGES

CONTINUOUS CONCRETE SLAB BRIDGES

NOVEMBER, 2006

SUPERSTRUCTURE DETAILS
140'-0 BRIDGE

J44-17-06