BILL OF REINFORCING STEEL FOR SUPERSTRUCTURE - 100' BRIDGE

LOCATION \ SKEW	SHAPE	BAR	0° NO.	0° LENGTH	0° WEIGHT	15° NO.	15° LENGTH	15° WEIGHT	30° NO.	30° LENGTH	30° WEIGHT	45° NO.	45° LENGTH	45° WEIGHT
SLAB LONGITUDINAL BOTTOM		8a1	53	23'-4	3302	53	23'-4	3302	53	23'-4	3302	53	23'-4	3302
SLAB LONGITUDINAL BOTTOM		8a2	53	33'-6	4741	53	33'-6	4741	53	33'-6	4741	53	33'-6	4741
SLAB LONGITUDINAL BOTTOM		8a3	53	31'-6	4458	53	31'-6	4458	53	31'-6	4458	53	31'-6	4458
SLAB LONGITUDINAL BOTTOM		9a4	52	29'-10	5275	52	29'-10	5275	52	29'-10	5275	52	29'-10	5275
SLAB LONGITUDINAL BOTTOM		9a5	26	32'-0	2829	26	32'-0	2829	26	32'-0	2829	26	32'-0	2829
SLAB LONGITUDINAL BOTTOM, AT RAIL		8a6	8	36'-10	787	8	36'-10	787	8	36'-10	787	8	36'-10	787
SLAB LONGITUDINAL BOTTOM, AT RAIL		8a7	4	37'-4	399	4	37'-4	399	4	37'-4	399	4	37'-4	399
SLAB LONGITUDINAL BOTTOM, AT RAIL		8a8	8	26'-1	558	8	26'-1	558	8	26'-1	558	8	26'-1	558
SLAB LONGITUDINAL BOTTOM, AT RAIL		8a9	4	22'-6	241	4	22'-6	241	4	22'-6	241	4	22'-6	241
SLAB LONGITUDINAL TOP		6b1	53	5'-10	465	53	5'-10	465	53	5'-10	465	53	5'-10	465
SLAB LONGITUDINAL TOP		10b2	53	26'-9	6101	53	26'-9	6101	53	26'-9	6101	53	26'-9	6101
SLAB LONGITUDINAL TOP		10b3	53	27'-6	6272	53	27'-6	6272	53	27'-6	6272	53	27'-6	6272
SLAB LONGITUDINAL TOP		7b4	53	15'-4	1662	53	15'-4	1662	53	15'-4	1662	53	15'-4	1662
SLAB LONGITUDINAL TOP		6b5	52	12'-7	983	52	12'-7	983	52	12'-7	983	52	12'-7	983
SLAB LONGITUDINAL TOP		9b6	52	22'-9	4023	52	22'-9	4023	52	22'-9	4023	52	22'-9	4023
SLAB LONGITUDINAL TOP		6b7	26	26'-10	1048	26	26'-10	1048	26	26'-10	1048	26	26'-10	1048
SLAB LONGITUDINAL TOP, AT RAIL		6b8	8	24'-4	293	8	24'-4	293	8	24'-4	293	8	24'-4	293
SLAB LONGITUDINAL TOP, AT RAIL		9b9	8	23'-6	640	8	23'-6	640	8	23'-6	640	8	23'-6	640
SLAB LONGITUDINAL TOP, AT RAIL		6b10	4	21'-0	127	4	21'-0	127	4	21'-0	127	4	21'-0	127
SLAB LONGITUDINAL TOP, AT RAIL		6b11	8	26'-4	317	8	26'-4	317	8	26'-4	317	8	26'-4	317
SLAB LONGITUDINAL TOP, AT RAIL		10b12	8	19'-0	655	8	19'-0	655	8	19'-0	655	8	19'-0	655
SLAB TRANSVERSE BOTTOM		6c1	97	23'-5	3412	97	24'-3	3534	90	23'-5	3166	82	23'-5	2885
SLAB TRANSVERSE BOTTOM		6c2	97	21'-3	3096	97	22'-0	3206	91	21'-3	2905	84	21'-3	2682
SLAB TRANSVERSE ENDS, BOTTOM		6c3	-	-	-	-	-	-	11	VARIES	226	18	VARIES	386
SLAB TRANSVERSE ENDS, BOTTOM		6c4	-	-	-	-	-	-	10	VARIES	219	18	VARIES	363
SLAB TRANSVERSE ENDS, BOTTOM		6c5	-	-	-	-	-	-	10	VARIES	180	17	VARIES	288
SLAB TRANSVERSE ENDS, BOTTOM		6c6	-	-	-	-	-	-	10	VARIES	193	16	VARIES	319
SLAB TRANSVERSE TOP		5d1	97	23'-9	2403	97	24'-7	2488	90	23'-9	2230	82	23'-9	2032
SLAB TRANSVERSE TOP		5d2	97	21'-3	2150	97	22'-0	2226	91	21'-3	2017	84	21'-3	1862
SLAB TRANSVERSE ENDS, TOP		5d3	-	-	-	-	-	-	11	VARIES	157	18	VARIES	268
SLAB TRANSVERSE ENDS, TOP		5d4	-	-	-	-	-	-	10	VARIES	152	18	VARIES	252
SLAB TRANSVERSE ENDS, TOP		5d5	-	-	-	-	-	-	10	VARIES	125	17	VARIES	200
SLAB TRANSVERSE ENDS, TOP		5d6	-	-	-	-	-	-	10	VARIES	134	16	VARIES	222
SLAB, TRANSVERSE AT ABUTMENT		8e1	20	26'-4	1407	20	27'-1	1447	20	29'-6	1576	20	34'-8	1852
SLAB, TRANSVERSE AT ABUTMENT		8e2	20	21'-4	1140	20	22'-0	1175	20	24'-5	1304	20	29'-7	1580
SLAB, HAIRPINS, AT ABUTMENT		6e3	92	6'-10	945	92	6'-11	956	92	7'-3	1002	92	7'-11	1094
PIER CAP HOOPS		5h1	60	7'-5	465	60	7'-5	465	80	7'-5	619	100	7'-5	774
PIER CAP ENDS		8h2	4	14'-5	154	4	14'-5	154	4	14'-5	154	4	14'-5	154
PIER CAP, BOTTOM LONGITUDINAL		8h3	8	25'-5	543	8	26'-7	568	8	29'-4	627	8	35'-0	748
PIER CAP, BOTTOM LONGITUDINAL		8h4	8	19'-11	426	8	20'-3	433	8	22'-2	474	8	26'-10	574
PIER CAP, TOP LONGITUDINAL		8h5	4	26'-2	280	4	27'-5	293	4	30'-4	324	4	36'-1	386
PIER CAP, TOP LONGITUDINAL		8h6	4	21'-5	229	4	21'-10	234	4	23'-11	256	4	28'-8	307
TOP OF SLAB, TRANSVERSE, AT RAIL		5j1	192	8'-6	1703	192	8'-6	1703	186	8'-6	1649	184	8'-6	1632
WING, VERTICAL		5m1-4	32	SHOWN	117	32	SHOWN	117	32	SHOWN	117	32	SHOWN	117
WING, HORIZONTAL		5n1	24	6'-8	167	24	6'-8	167	24	6'-8	167	24	6'-8	167
PAVING SUPPORT, TRANSVERSE		5p1	40	8'-10	369	42	8'-10	387	46	8'-10	424	56	8'-10	516
PAVING SUPPORT LONGITUDINAL		5p3	6	22'-9	143	6	24'-0	151	6	26'-5	166	6	31'-9	199
PAVING SUPPORT LONGITUDINAL		5p4	6	20'-0	126	6	20'-9	130	6	23'-1	145	6	28'-3	177
SUB TOTAL - LBS.					64,451			65,010			65,884			67,212
BARRIER RAIL - SEE LIST ON RAIL SHEET J40-46-06					6153			6153			6153			6153
OPEN RAIL - SEE LIST ON RAIL SHEET J40-49-06					6182			6182			6182			6182
TOTAL - LBS. WITH MONOLITHIC PIER CAP		WITH BARRIER RAIL			70,604			71,163			72,037			73,365
		WITH OPEN RAIL			70,633			71,192			72,066			73,394
TOTAL - LBS. WITH NON-MONOLITHIC PIER CAP		WITH BARRIER RAIL			68,507			69,016			69,583			70,422
SAME AS ABOVE EXCEPT ALL "h" BARS DELETED		WITH OPEN RAIL			68,536			69,045			69,612			70,451

ESTIMATED QUANTITIES FOR SUPERSTRUCTURE - 100' BRIDGE

ITEM		SKEW	WITH MONOLITHIC PIER CAP 0°	15°	30°	45°	WITH NON-MONOLITHIC PIER CAP 0°	15°	30°	45°
WITH BARRIER RAIL	*STRUCTURAL CONCRETE (BRIDGE)	C.Y.	275.6	277.0	281.7	291.7	269.6	270.8	274.7	283.4
	REINFORCING STEEL EPOXY COATED	LBS.	70,604	71,163	72,037	73,365	68,507	69,016	69,583	70,422
CONCRETE BARRIER OR OPEN RAIL		LIN. FT.	222.0	222.2	222.9	224.5	222.0	222.2	222.9	224.5
WITH OPEN RAIL	*STRUCTURAL CONCRETE (BRIDGE)	C.Y.	275.5	276.8	281.5	291.5	269.4	270.6	274.6	283.2
	REINFORCING STEEL EPOXY COATED	LBS.	70,633	71,192	72,066	73,394	68,536	69,045	69,612	70,451

* INCLUDES 4 WINGS @ 0.71 C.Y. EACH; EXCLUDES RAIL CONCRETE.

BENT BAR DETAILS

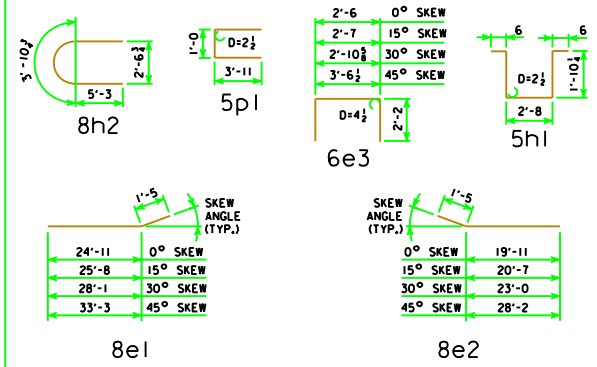

NOTE: ALL DIMENSIONS ARE OUT TO OUT. D = PIN DIAMETER.

NOTES:

ALL REINFORCING STEEL SHALL BE EPOXY COATED.

THE TRANSVERSE REBARS ARE DETAILED WITH A SPLICE LAP. AT THE CONTRACTOR'S OPTION, THIS LAP MAY BE ELIMINATED BY FURNISHING FULL LENGTH BARS WITH NO REDUCTION IN PAY WEIGHT FOR SAME.

LATEST REVISION DATE

APPROVED BY BRIDGE ENGINEER

Iowa Department of Transportation
Highway Division

STANDARD DESIGN - 40' ROADWAY, 3 SPAN BRIDGES

CONTINUOUS CONCRETE SLAB BRIDGES

NOVEMBER, 2006

SUPERSTRUCTURE DETAILS 100'-0 BRIDGE

J40-09-06