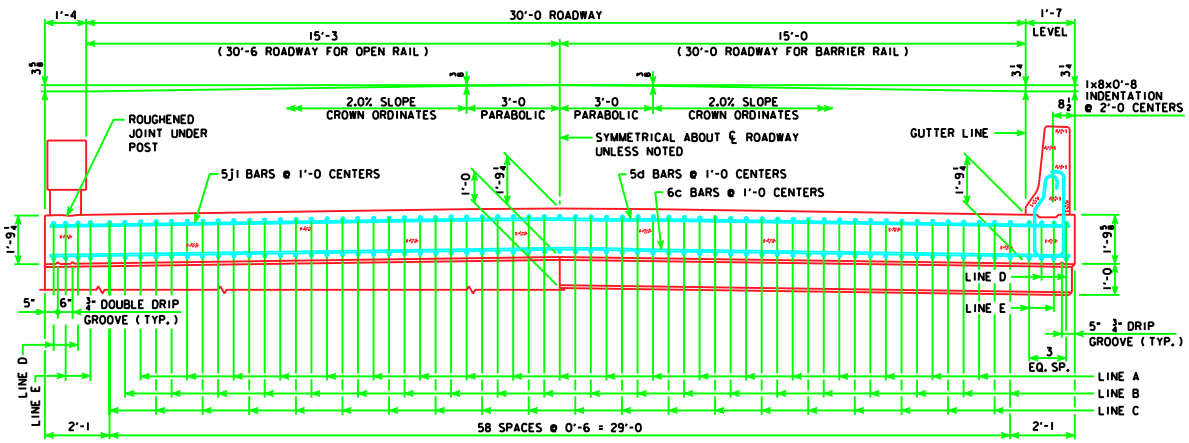

HALF SECTION NEAR ABUTMENT

HALF SECTION NEAR PIER

SLAB CROSS-SECTIONAL AREA FOR OPEN RAIL = 58.74 SQ. FT.

NOTE: TOP LONGITUDINAL REINFORCING STEEL IS TO BE PARALLEL TO AND 2½" CLEAR BELOW TOP OF SLAB. BOTTOM LONGITUDINAL REINFORCING STEEL IS TO BE PARALLEL TO AND 1½" CLEAR ABOVE BOTTOM OF SLAB. REINFORCING STEEL IS TO BE SECURELY WIRED IN PLACE AND ADEQUATELY SUPPORTED ON METAL BAR CHAIRS BEFORE CONCRETE IS POURED.

SLAB CROSS-SECTIONAL AREA FOR BARRIER RAIL = 58.79 SQ. FT.

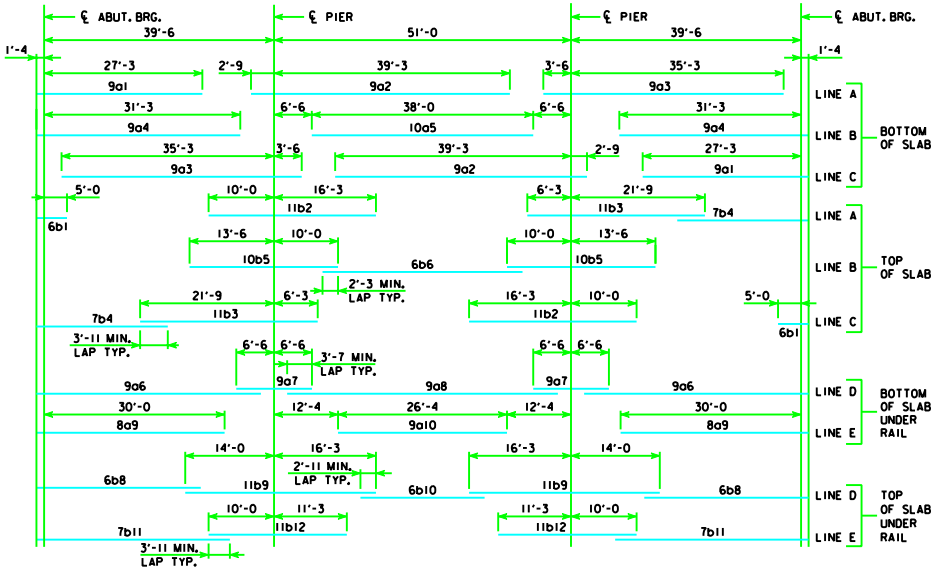

PLACEMENT FOR LONGITUDINAL REINFORCEMENT

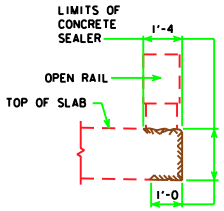

CONCRETE SEALER LIMITS FOR OPEN RAILS

CONCRETE SEALER SHALL BE APPLIED TO BOTH SIDES OF BRIDGE SLAB ON THE TOP, EDGE OF SLAB AND UNDER SLAB FOR FULL LENGTH OF BRIDGE TO LIMITS SHOWN IN DETAIL. SEALER SHALL BE APPLIED IN ACCORDANCE WITH STANDARD SPECIFICATION 2403.21D.

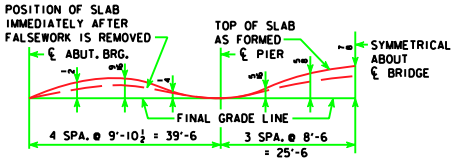

FORM CAMBER DIAGRAM

THIS DIAGRAM SHOWS THE FORM CAMBER REQUIRED TO COMPENSATE FOR THE ANTICIPATED ULTIMATE DEAD LOAD DEFLECTION. THE ABOVE DIMENSIONS DO NOT INCLUDE ANY ALLOWANCE FOR FORM DEFLECTION OR FALSEWORK SETTLEMENT.

LATEST REVISION DATE

APPROVED BY BRIDGE ENGINEER

Iowa Department of Transportation
Highway Division

STANDARD DESIGN - 30' ROADWAY, 3 SPAN BRIDGES

CONTINUOUS CONCRETE SLAB BRIDGES

NOVEMBER, 2006

SUPERSTRUCTURE DETAILS
130'-0 BRIDGE

NON-EPOXY COATED REINFORCING

J30-14B-06