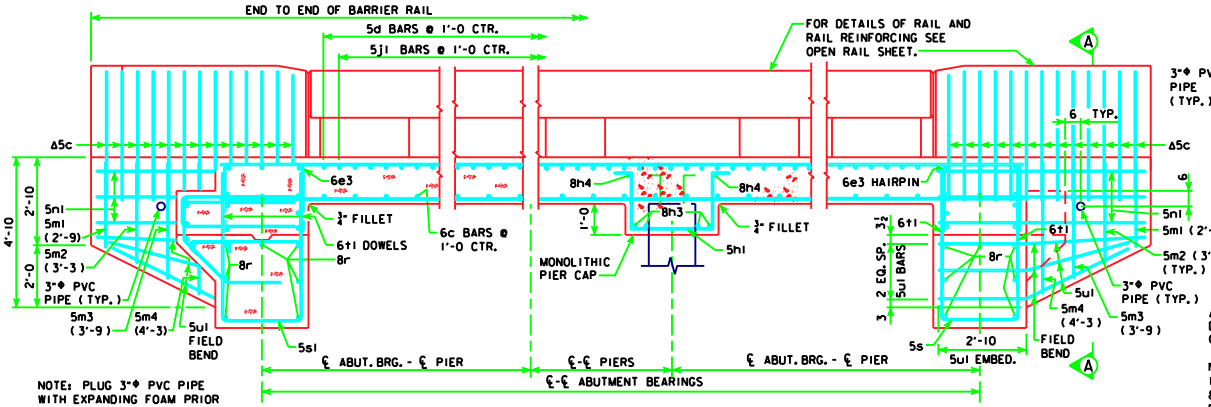

NOTE: PLUG 3"Φ PVC PIPE WITH EXPANDING FOAM PRIOR TO BACKFILLING BEHIND ABUTMENTS.

PART LONGITUDINAL SECTION NEAR GUTTER LINE

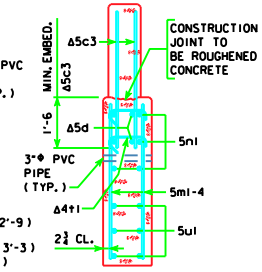

SECTION A-A

Δ NOTE: SEE OPEN BARRIER RAIL DETAILS IN THESE PLANS FOR DETAILS OF BARRIER RAIL END SECTION.

NOTE: 5m1-4 & 5n1 BARS ARE INCLUDED IN SUPERSTRUCTURE BAR LIST. 5c, 5d & 4t1 BARS ARE INCLUDED IN BARRIER RAIL BAR LIST.

SUPERSTRUCTURE NOTES:

THIS BRIDGE IS DESIGNED FOR HL-93 LOADING PLUS AN ALLOWANCE OF 20 POUNDS PER SQUARE FOOT OF ROADWAY FOR FUTURE WEARING SURFACE.

THE SLAB AS SHOWN INCLUDES A ½ INCH INTEGRAL WEARING SURFACE.

THE MINIMUM CLEAR DISTANCE FROM FACE OF CONCRETE TO NEAR REINFORCING BAR SHALL BE 2 INCHES UNLESS OTHERWISE NOTED OR SHOWN. ALL REINFORCING STEEL IS TO BE SECURELY WIRED IN PLACE. SEE "BAR CHAIR NOTE".

ALL REINFORCING SHALL BE GRADE 60.

THE CONCRETE SLAB IS TO BE PLACED CONTINUOUSLY FROM ONE END OF THE BRIDGE TO THE OTHER. THE CONTRACTOR SHALL BE REQUIRED TO SUBMIT EVIDENCE THAT THE NECESSARY EQUIPMENT AND FACILITIES ARE AVAILABLE TO ACCOMPLISH THE REQUIRED RESULTS. SLAB CONSTRUCTION JOINTS MAY BE USED, IF REQUIRED. SLAB FALSEWORK SHALL BE REMOVED PRIOR TO CONSTRUCTION OF THE RAILS.

NOTE THAT WHEN PORTLAND CEMENT APPROACH PAVEMENT IS PLACED, COMPRESSIBLE JOINT MATERIAL MUST BE USED BETWEEN PAVEMENT AND END OF BRIDGE.

IF NECESSARY TO PREVENT DAMAGE TO THE END OF THE BRIDGE DECK OR BACKWALL FROM CONSTRUCTION EQUIPMENT, AN APPROPRIATE METHOD OF PROTECTION APPROVED BY THE ENGINEER SHALL BE PROVIDED BY THE BRIDGE CONTRACTOR AT NO EXTRA COST TO THE STATE.

COST OF FURNISHING AND PLACING 3"Φ PVC PIPE IN EACH WING IS INCLUDED IN THE PRICE BID FOR STRUCTURAL CONCRETE.

BAR CHAIR NOTE:

TOP MAT OF REINFORCING STEEL IS TO BE SUPPORTED BY INDIVIDUAL METAL BAR CHAIRS SPACED AT NOT MORE THAN 3'-0 CENTERS LONGITUDINALLY AND TRANSVERSELY. THE BOTTOM MAT OF REINFORCING STEEL IS TO BE SUPPORTED BY INDIVIDUAL METAL BAR CHAIRS SPACED AT NOT MORE THAN 3'-0 CENTERS LONGITUDINALLY AND TRANSVERSELY, OR BY CONTINUOUS ROWS OF METAL HIGH CHAIRS OR SLAB BOLSTERS SPACED 4'-0 APART.

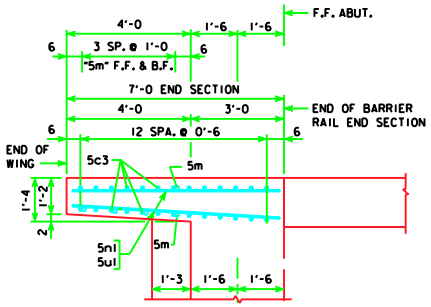

PART PLAN 0° SKEW
(RAIL NOT SHOWN)

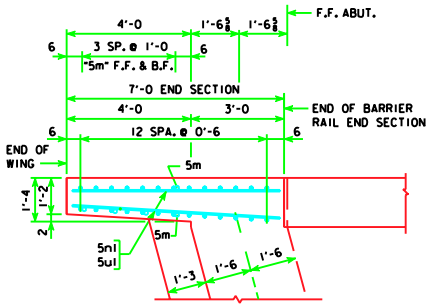

PART PLAN 15° SKEW
(RAIL NOT SHOWN)

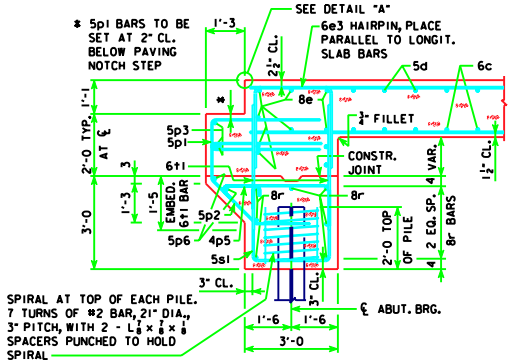

SECTION NORMAL TO ABUTMENT AT ℄

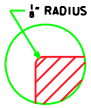

DETAIL "A"

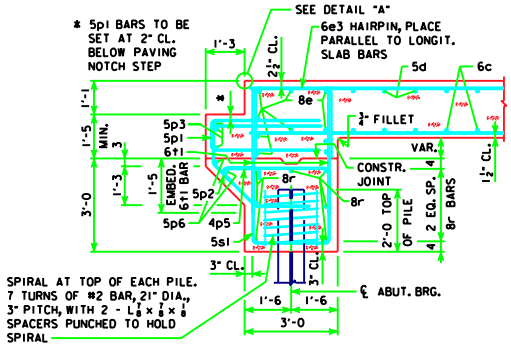

SECTION NORMAL TO ABUTMENT AT RAIL

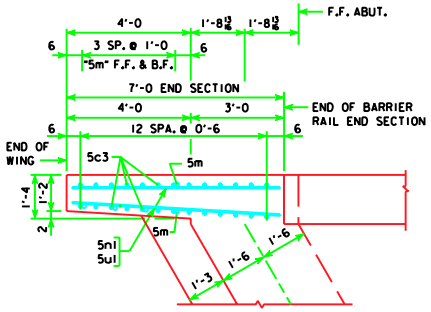

PART PLAN 30° SKEW
(RAIL NOT SHOWN)

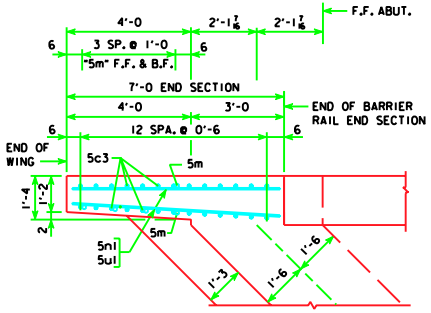

PART PLAN 45° SKEW
(RAIL NOT SHOWN)

NOTE:
THE RELATIONSHIP OF THE 8e BARS IN THE BACKFACE OF THE DIAPHRAGM WITH THE 5p1 AND 5p2 BARS SHALL BE MAINTAINED AS THE DIAPHRAGM CHANGES DEPTH.

LATEST REVISION DATE	APPROVED BY BRIDGE ENGINEER	Iowa Department of Transportation Highway Division	
		STANDARD DESIGN - 24' ROADWAY, 3 SPAN BRIDGES CONTINUOUS CONCRETE SLAB BRIDGES NOVEMBER, 2006	
		SUPERSTRUCTURE DETAILS ALL BRIDGES	J24-20-06