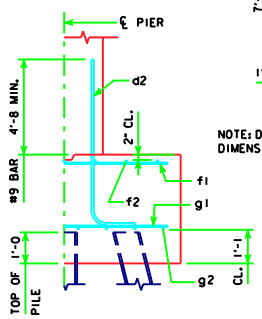

TYPICAL SECTION

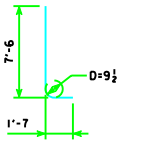

d2

NOTE: D = PIN DIAMETER.
DIMENSIONS ARE OUT TO OUT.

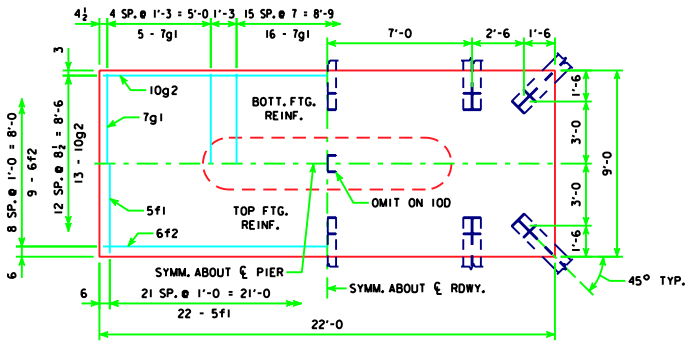

4'-0 x 9'-0 x 22'-0 FOR 10D & 11B

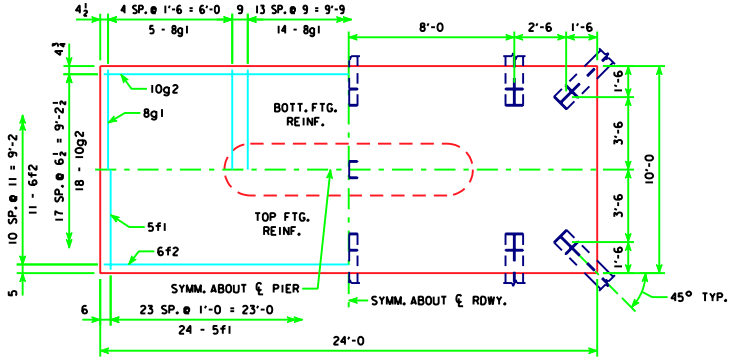

4'-0 x 10'-0 x 24'-0 FOR 11D

H IN FT.	℄ - ℄ ABUT. BRG.	PILING NO. & LAYOUT	PILING DES. BRG. (TONS)	FOOTING SIZE
25 TO 27	201'-4	10D	47	4' x 9' x 22'
	213'-10	10D	48	
	226'-4	10D	50	
	243'-0	11B	48	
28 TO 30	201'-4	10E	48	4' x 9' x 24'
	213'-10	10E	49	
	226'-4	10E	50	
	243'-0	11C	48	
31 TO 33	201'-4	11D	46	4' x 10' x 24'
	213'-10	11D	47	
	226'-4	11D	49	
	243'-0	11D	50	
34 TO 36	201'-4	12A	43	4' x 13' x 22'
	213'-10	12A	44	
	226'-4	12A	45	
	243'-0	12A	46	
37 TO 40	201'-4	12A	45	4' x 13' x 22'
	213'-10	12A	46	
	226'-4	12A	47	
	243'-0	12A	48	

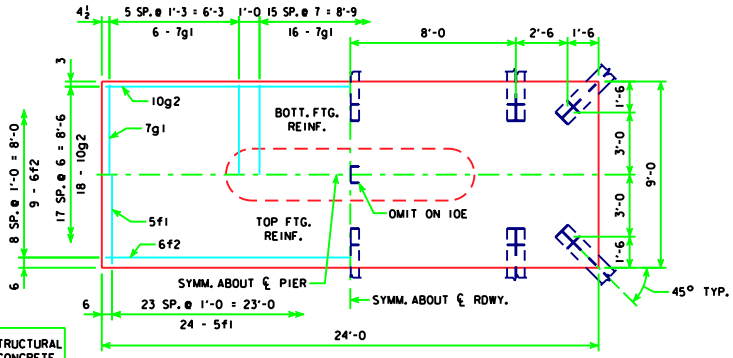

4'-0 x 9'-0 x 24'-0 FOR 10E & 11C

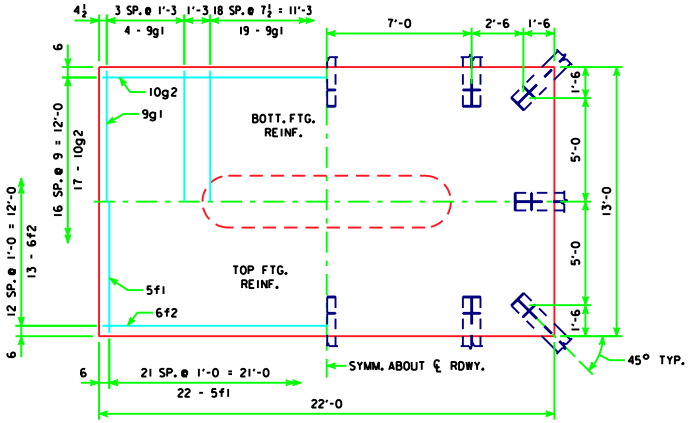

4'-0 x 13'-0 x 22'-0 FOR 12A

FOOTING SIZE	BAR	REINFORCING STEEL (ONE FOOTING) NO., SIZE & SPACING	LENGTH	WEIGHT (LB.)	TOTAL WEIGHT (LB.)	STRUCTURAL CONCRETE (CY)
4' x 9' x 22'	d2	30 - #9 AS SHOWN	9'-1	926	3091	29.3
	f1	22 - #5 @ 1'-0	8'-8	199		
	f2	9 - #6 @ 1'-0	21'-8	293		
	g1	26 - #7 AS SHOWN	8'-8	461		
	g2	13 - #10 @ 0'-8½	21'-8	1212		
4' x 9' x 24'	d2	30 - #9 AS SHOWN	9'-1	926	3792	32.0
	f1	24 - #5 @ 1'-0	8'-8	217		
	f2	9 - #6 @ 1'-0	23'-8	320		
	g1	28 - #7 AS SHOWN	8'-8	496		
	g2	18 - #10 @ 0'-6	23'-8	1833		
4' x 10' x 24'	d2	30 - #9 AS SHOWN	9'-1	926	4011	35.6
	f1	24 - #5 @ 1'-0	9'-8	242		
	f2	11 - #6 @ 0'-11	23'-8	391		
	g1	24 - #8 AS SHOWN	9'-8	619		
	g2	18 - #10 @ 0'-6½	23'-8	1833		
4' x 13' x 22'	d2	30 - #9 AS SHOWN	9'-1	926	4388	42.4
	f1	22 - #5 @ 1'-0	12'-8	291		
	f2	13 - #6 @ 1'-0	21'-8	423		
	g1	27 - #9 AS SHOWN	12'-8	1163		
	g2	17 - #10 @ 0'-9	21'-8	1585		

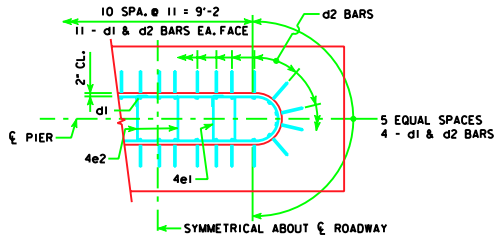

d2 BAR LAYOUT
(SEE SECTION A-A ON SHEET H24-46-06.)

NOTE:
SEE SHEET H24-47-06 FOR FOOTING NOTES.

LATEST REVISION DATE

APPROVED BY BRIDGE ENGINEER

Iowa Department of Transportation
Highway Division

STANDARD DESIGN STANDARD FOR THREE SPAN BRIDGE
PRETENSIONED PRESTRESSED
CONCRETE BEAM BRIDGES
HL93 SUPERSTRUCTURE DECEMBER 2006 HS25 SUBSTRUCTURE

TEE PIER - STEEL PILE FOOTINGS, H=25' TO 40'
0° SKEW

H24-48-06