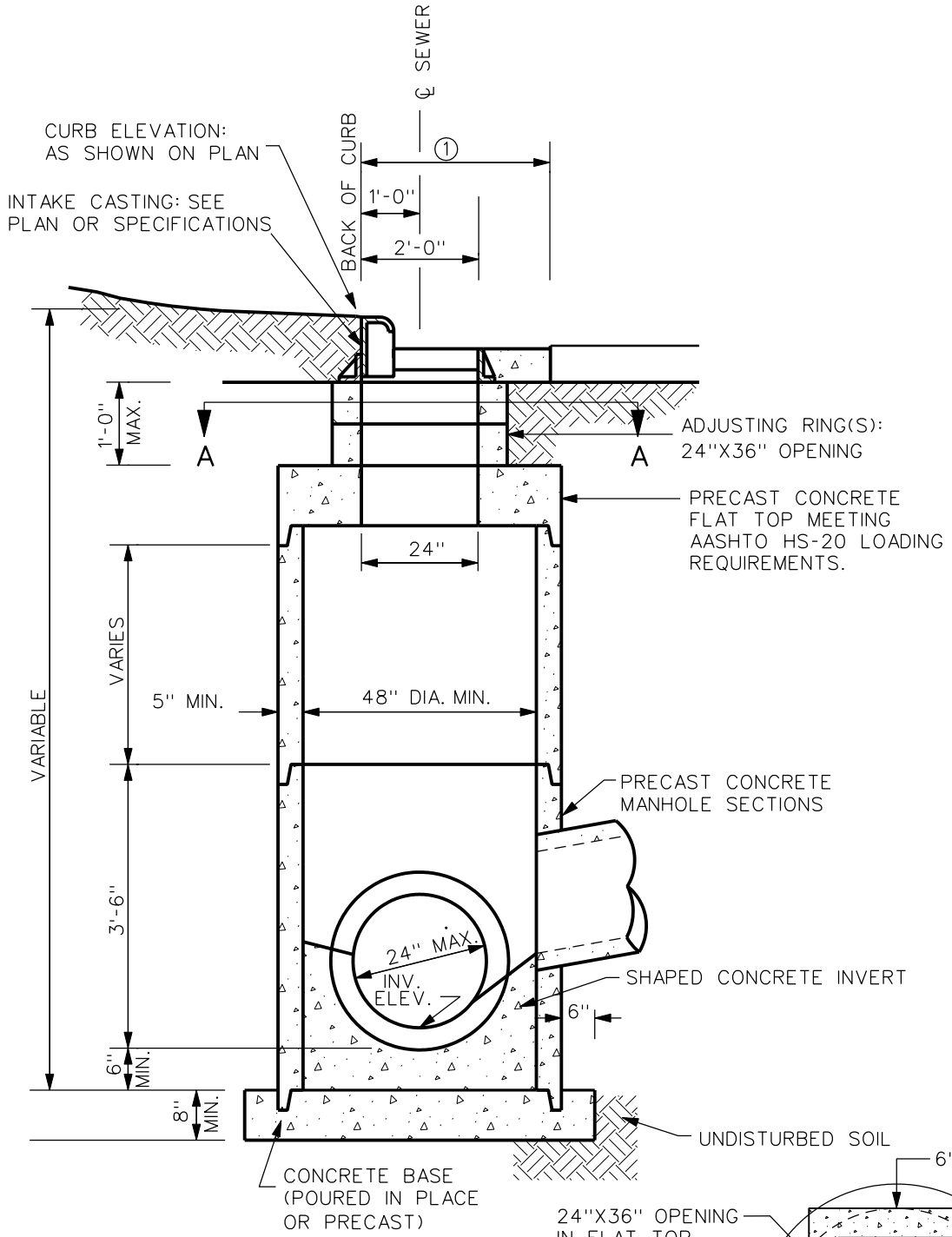

SECTION B-B

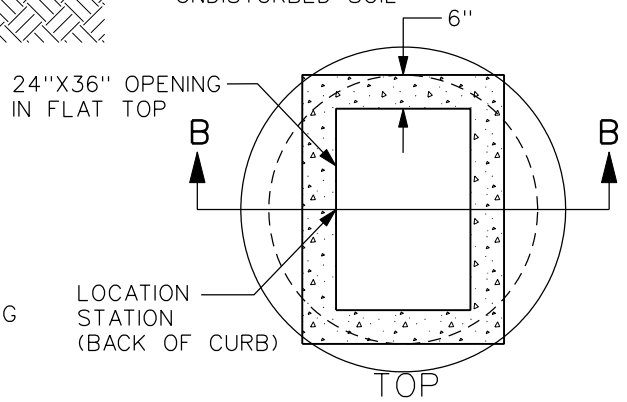

SECTION A-A

NOTES:

1. SEE FIGURE 6030.16 FOR BOXOUT DETAILS.
2. APPLY BITUMINOUS JOINT COMPOUND TO ADJUSTING RINGS AND MANHOLE SECTION JOINTS.

REV.	DATE	BY		
3	10/18/05		SINGLE, TYPE "M-B" INTAKE	FIGURE: 6030.2
DATE: 01-01-98				SHEET 1 OF 1