## SITUATION 2

Public cross-traffic maintained.
No access to project.

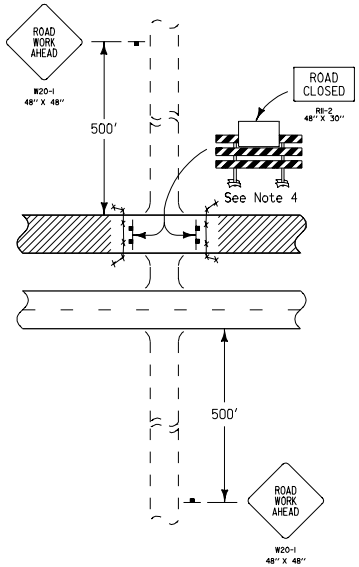


## SITUATION 3

No access to project
(Applicable to T-intersections)

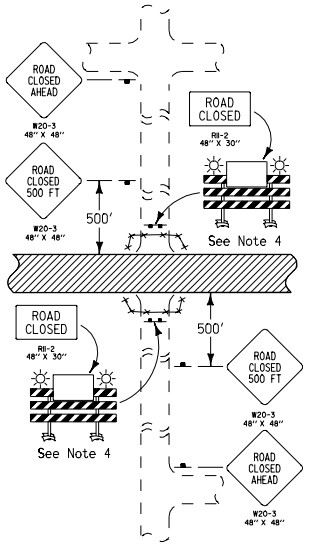


## SITUATION 4

Public cross-traffic maintained.
No access to project.

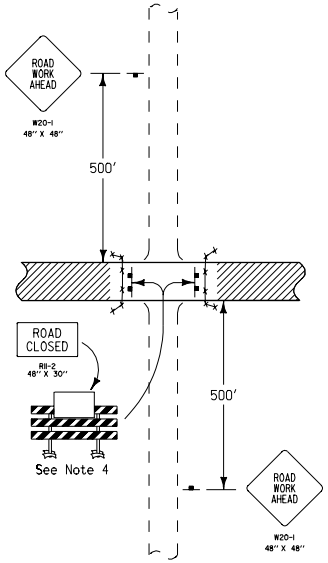


## SITUATION 5

Public cross-traffic maintained.
Contractor and resident access.

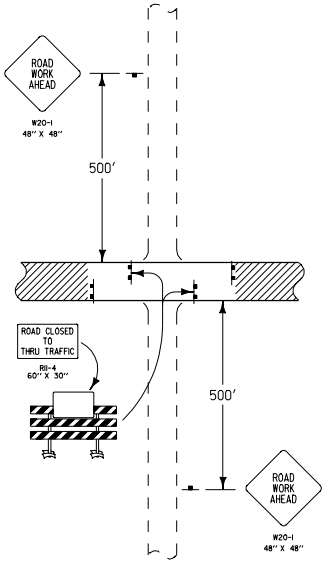


## SITUATION 6

See Note 7.
No public access. Contractor and resident access only. (Applicable to T-intersections)

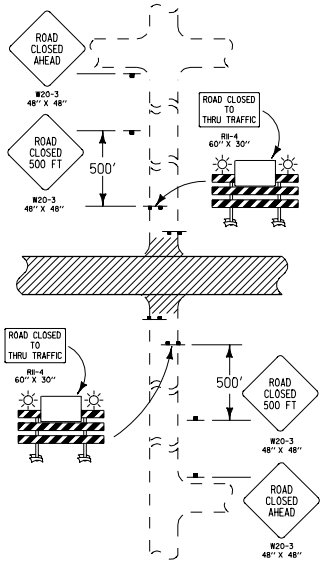


## SITUATION 1

Project Route Closure

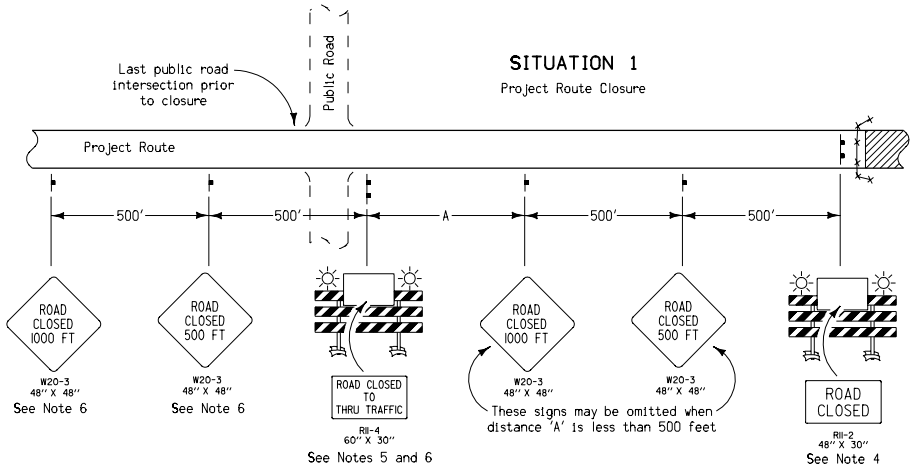


## GENERAL NOTES

1. Situation 1 illustrates traffic control necessary to close the project route. Situations 2 through 6 are for signing of side–roads based on existing agreements and field conditions and will be selected by the Engineer in charge of construction.
2. Type 'A' Flashing Warning Lights shall be visible to both directions of traffic. The backside of the Type III barricades shall be fully reflectorized unless there is no access permitted beyond the barricade. Stripes shall be properly sloped down toward the traffic side.
3. Sideroads on 2 to 4–lane grading projects shall be signed in accordance with situation 2 during suspension of work (e.g. over winter).
4. Road closures will be measured and paid for according to Section 2518 of the Standard Specifications.
5. In Situation 1, when distance 'A' is less than 500 feet, the barricade should be placed in the middle of the traffic lane approaching the work area. In this case, Note 2 shall apply. The barricade may be omitted if the distance to the work area is less than 250 feet.
6. In Situation 1, if the intersection is the point of detour these two signs and barricade will become the responsibility of the contracting authority and may be modified by the contracting authority to fit detour signing.
7. Situation 5 should be used when cross traffic is maintained during suspension of work (e.g. over winter).
8. Short portions of the safety fence may be moved to allow temporary access during working hours. All safety fence shall be replaced at the end of each day.

### LEGEND

- Traffic Sign
- Type III Barricade (Type 'A' Low Intensity Flashing Warning Lights Required for Nighttime Use)
- Orange Plastic Safety Fence
- Type 'A' Low Intensity Flashing Warning Light
- Work Area

Iowa Department of Transportation
*Highway Division*

**STANDARD ROAD PLAN** | **RS-26A**

REVISION: Change length on intersecting road from 200' to 500'.

| REVISION NO. | 3 |
|---|---|
| REVISION DATE | 10-18-05 |

William J. Stein
APPROVED BY DESIGN METHODS ENGINEER

SIGNING FOR TEMPORARY ROAD CLOSURES IN RURAL AREAS (PROJECT ROUTE CLOSED TO TRAFFIC)