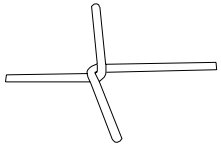

Step 1

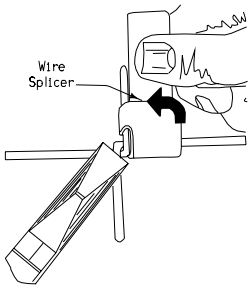


Step 2

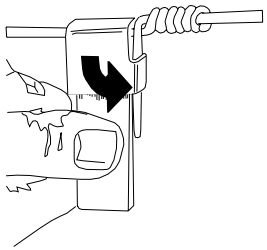

Step 3

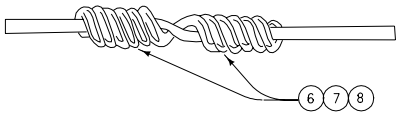


Step 4

DETAILS OF WIRE SPLICE

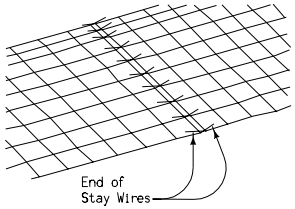


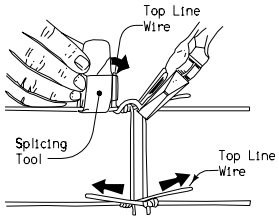


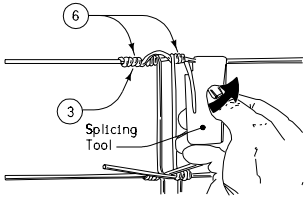


APPROVED FENCE SPLICE

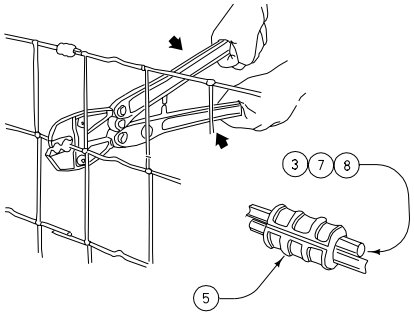


CRIMP CONNECTOR

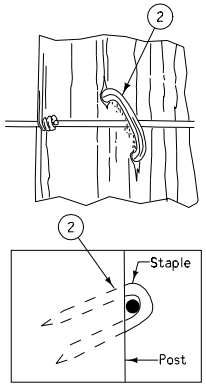


APPROVED STAPLE DETAILS

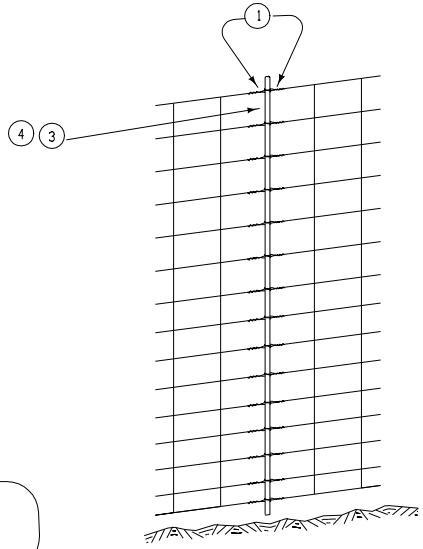


DETAILS OF SPLICE
(Fabric with Rod)

1. Make a minimum of four tight wraps back around itself. Ends of the wrap to be trimmed flush.
2. Set staples cross–wise to the grain. Staples are to be driven tight at pull posts. All other wood post staples shall be driven firm, but loose enought to allow lateral movement of the wire.
3. Approved fence fabric wire splice.
4. Loop each line wire around a galvanized, 1/2 inch rod at least 2 inches longer than the fabric.
5. Crimp Connectors shall develop a strength of at least 85% of the wire strength.
6. Make a minimum of four tight wraps on the connecting wire. Ends of the wrap to be trimmed flush.
7. Approved barbed wire splice.
8. Approved brace wire splice.

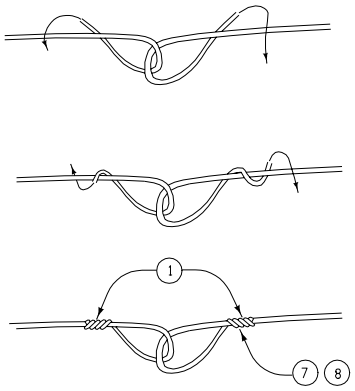


WIRE SPLICING DETAILS

Iowa Department of Transportation
*Highway Division*

**STANDARD ROAD PLAN** | **RC-8B(2)**

REVISION: Remove barbed wire.

REVISION NO. 1

REVISION DATE 04-18-06

Deanna Maifeldt
APPROVED BY DESIGN METHODS ENGINEER

FIELD FENCE CONSTRUCTION
(Sheet 2 of 2)