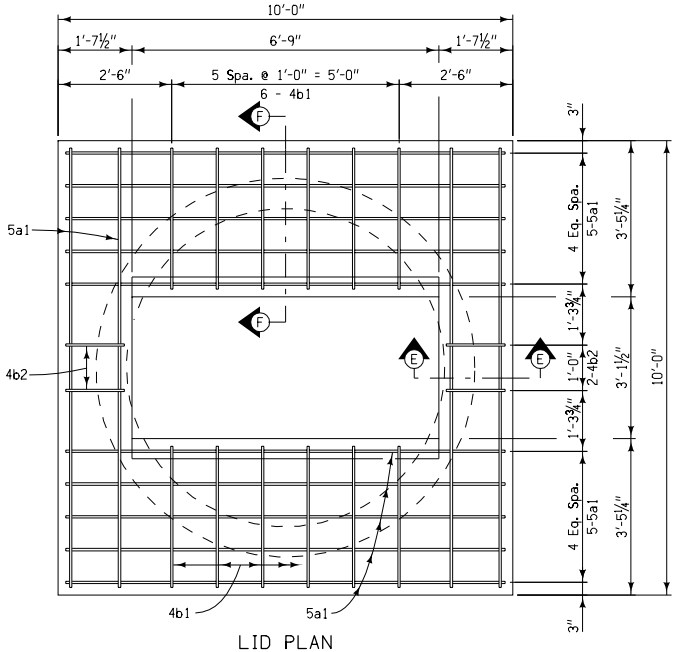

LID PLAN

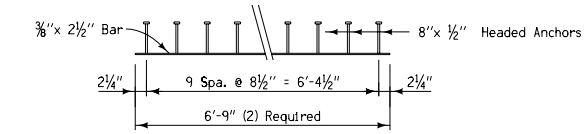

FRAME RING EDGE ARMOR DETAIL

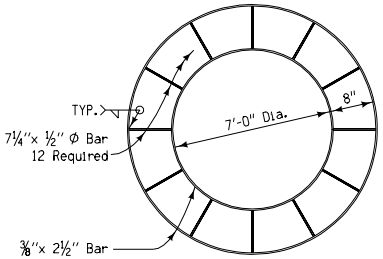

WALL EDGE ARMOR DETAIL

All edge armor steel to be ASTM A36, galvanized after fabrication.

BILL OF REINFORCING STEEL

THREE GRATE INTAKE LID - EPOXY COATED

BAR	LOCATION	SHAPE	NO.	LENGTH	WEIGHT
5a1	Lid, Longit. & Transverse	—	28	9'-8	282
4b1	Lid Hoop		12	8'-3	66
4b2	Lid Hoop		4	5'-4	14
	EPOXY COATED REINFORCING STEEL - TOTAL				362

BENT BAR DETAILS

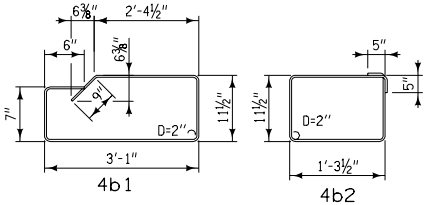

NOTE: ALL DIMENSIONS SHOWN OUT TO OUT. D = PIN DIAMETER

QUANTITY SUMMARY FOR THREE GRATE INTAKE LID

Concrete	3.8	CY	*
Epoxy Coated Reinforcing Steel	362	LB	

* Based on Minimum thickness = 1'-4"

The clear distance from face of concrete to near edge or end of reinforcing bar to be 2" unless otherwise noted.

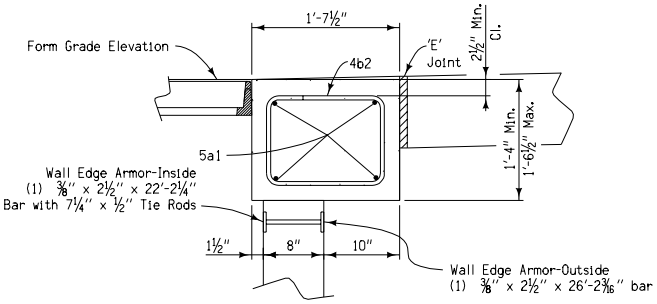

SECTION E-E

(1) Possible Subdrain. See Plans for location and elevation. See Standard Road Plan RF-19C for connection details.

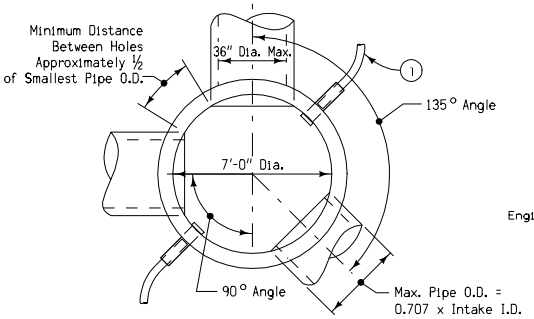

SECTION C-C

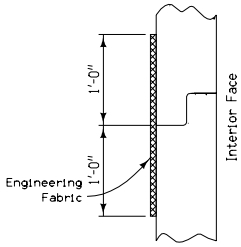

WALL JOINT DETAIL

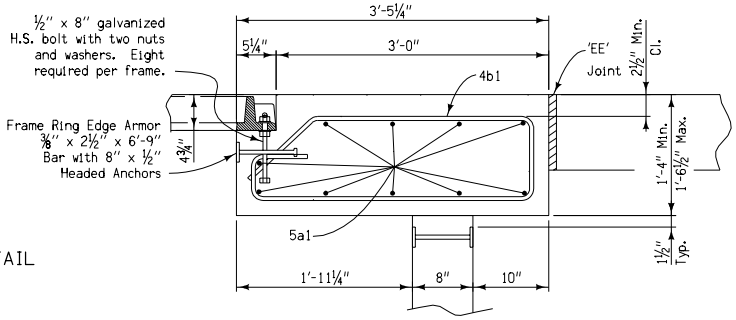

SECTION F-F

Iowa Department of Transportation
Highway Division

STANDARD ROAD PLAN RA-47B(2)

REVISION: NEW

REVISION NO. NEW

REVISION DATE 04-18-06

Deanna Maifeldt
APPROVED BY DESIGN METHODS ENGINEER

TRIPLE GRATE
BARRIER INTAKE, CIRCULAR

(Sheet 2 of 3)