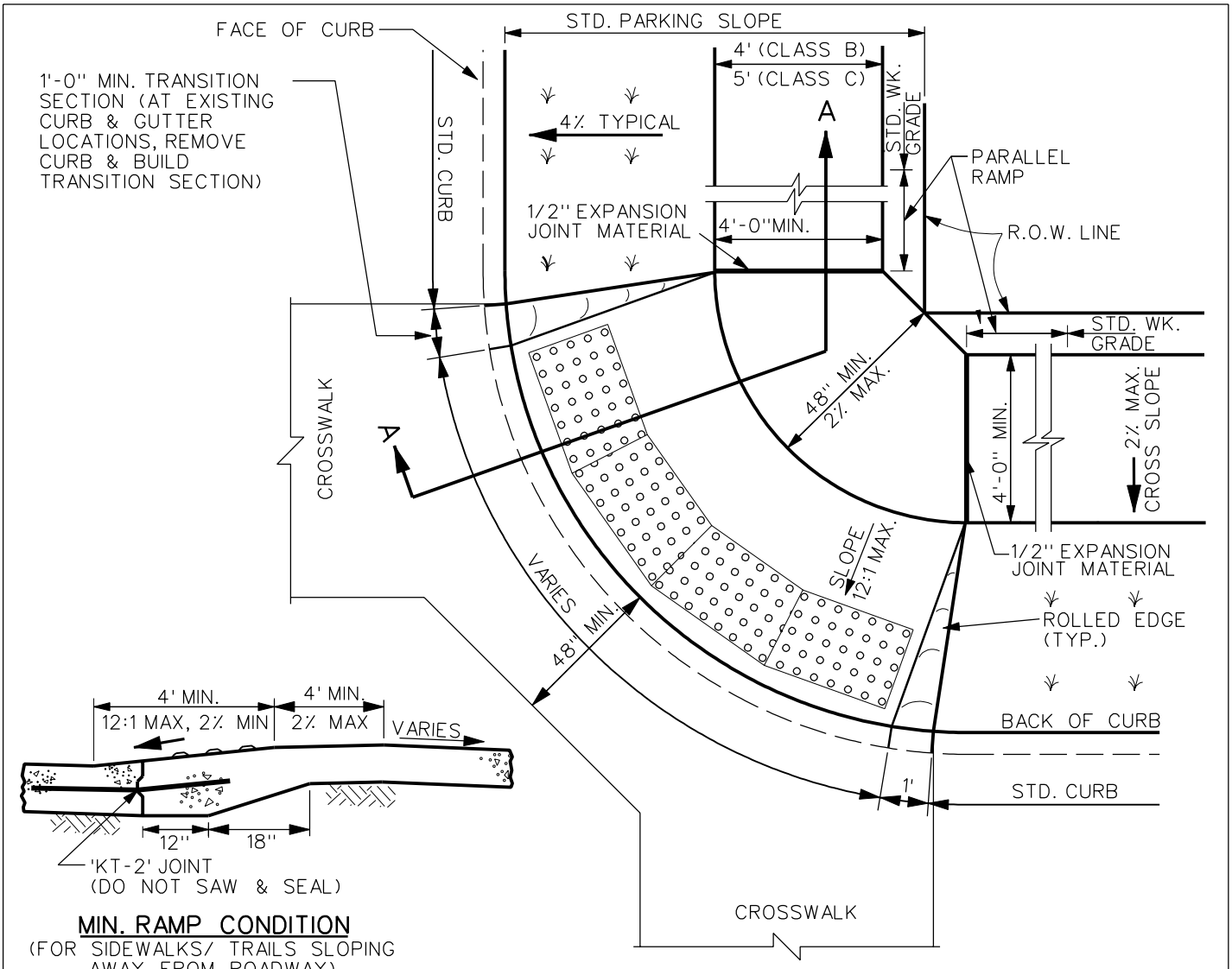

MIN. RAMP CONDITION
(FOR SIDEWALKS/ TRAILS SLOPING AWAY FROM ROADWAY)

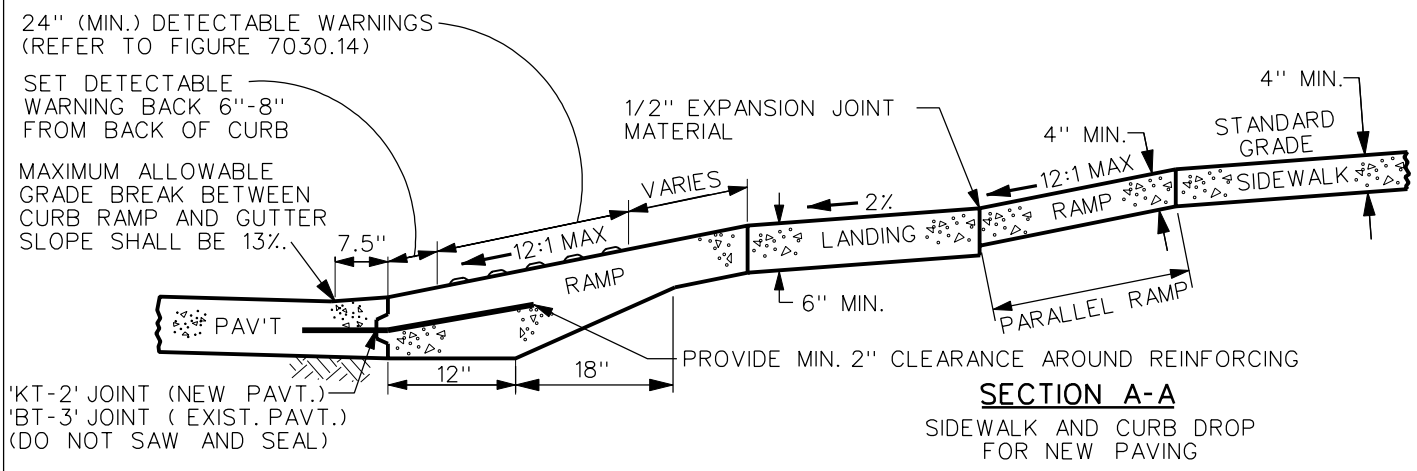

SECTION A-A
SIDEWALK AND CURB DROP FOR NEW PAVING

NOTE:
THE LENGTH OF THE PARALLEL RAMP SHALL NOT BE REQUIRED TO EXCEED 15', REGARDLESS OF THE RESULTING SLOPE.

REV.	DATE	BY
3	10/19/04	

DATE: 01-01-98

OPTIONAL RAMP WITHIN INTERSECTION RADIUS FOR CLASS "B" OR "C" SIDEWALK

FIGURE: 7030.13

SHEET 1 OF 1