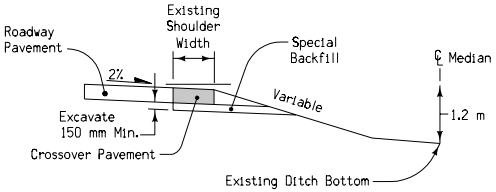

Section A-A

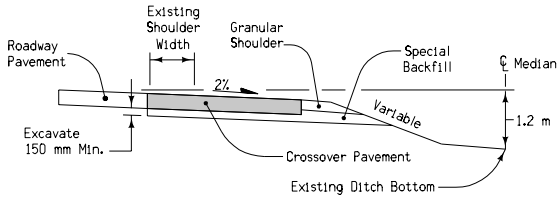

Section B-B

Contract Items:

- Detour Pavement
- Special Backfill
- Granular Shoulder
- Embankment In Place
- Excavation, Class 10, Roadway and Borrow
- Excavation, Class 13, Roadway and Borrow
- Removal of Pavement

Tabulation: 112-8

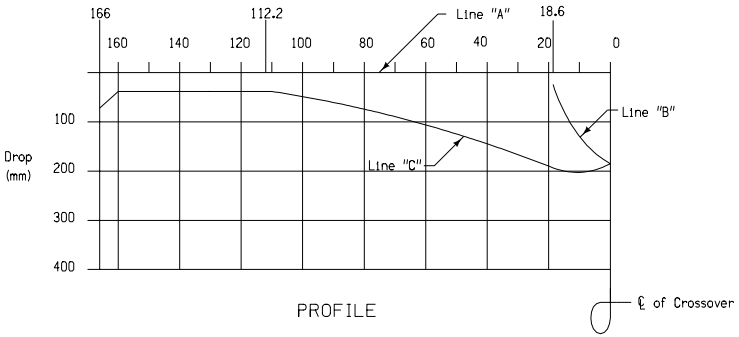

PROFILE

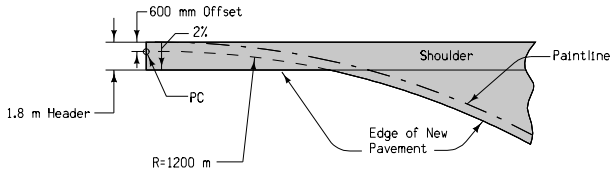

Detail 'A'

1. Match crossover pavement joints with existing roadway joints. 'CD' joints are required. See Standard Road Plan RH-50.
2. KT-2 Joint, bend bars out for new pavement only.
3. Median crossover is symmetrical at centerline.
4. Median pipe for crossover. See Detail Sheet 500-19.

Design Quantity Table		
Detour Pavement m^2	Special Backfill MG	Granular Shoulder MG
1470	1140	100

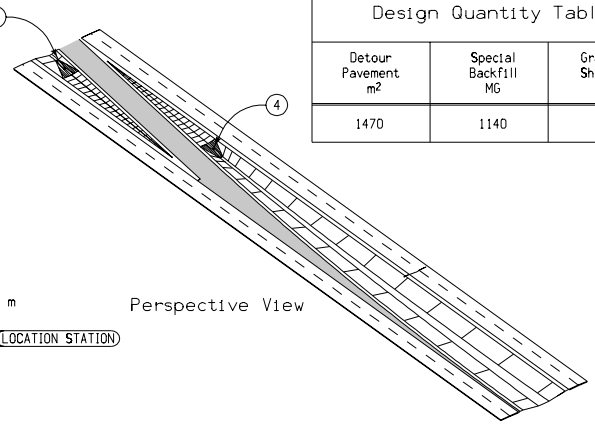

Perspective View

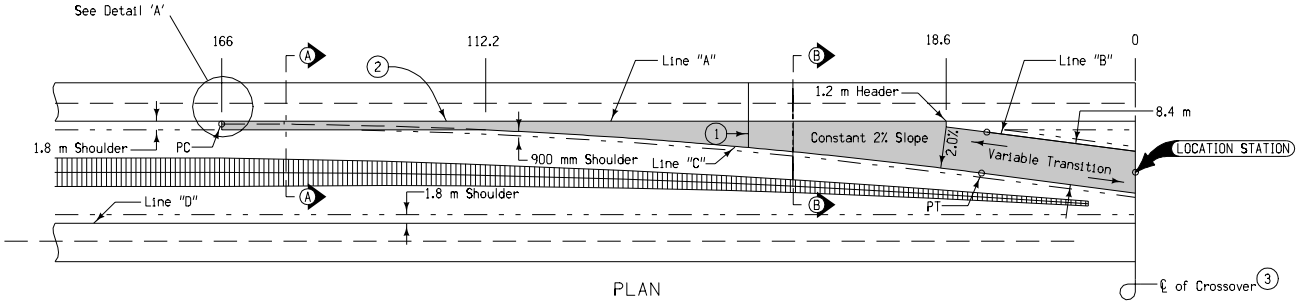

PLAN

All dimensions given in millimeters unless noted.

Table Of Offsets And Drops																			
Distance (m)	166	160	150	140	130	120	112.2	110	100	90	80	70	60	50	40	30	20	18.6	10	0
Offset A to C (m)	1.8	1.8	1.8	1.8	1.8	1.8	1.8	1.90	2.41	3.00	3.68	4.44	5.28	6.21	7.22	8.32	9.49	9.66	10.67	11.8
Drop A to C (mm)	72	36	36	36	36	36	36	38	48.2	60	73.6	88.8	105.6	124.2	144.4	166.4	189.8	193.2	202.62	184.8
Drop A to B (mm)																		24	129.4	184.8

M

METRIC VERSION

Iowa Department of Transportation
Highway Division

STANDARD ROAD PLAN **RV-12C**

REVISION: NEW.

REVISION NO.	REVISION DATE
NEW	04-19-05

William J. Stein
APPROVED BY DESIGN METHODS ENGINEER

MEDIAN CROSSOVER
(15.24 m MEDIAN)
8.4 m WIDE 2 LANE