All Wire Rope Safety Barrier shall be designed, manufactured, and supplied by Brifen USA, or a designated distributor.

Contract Item:

Wire Rope Safety Barrier

Tabulation: 108-9A

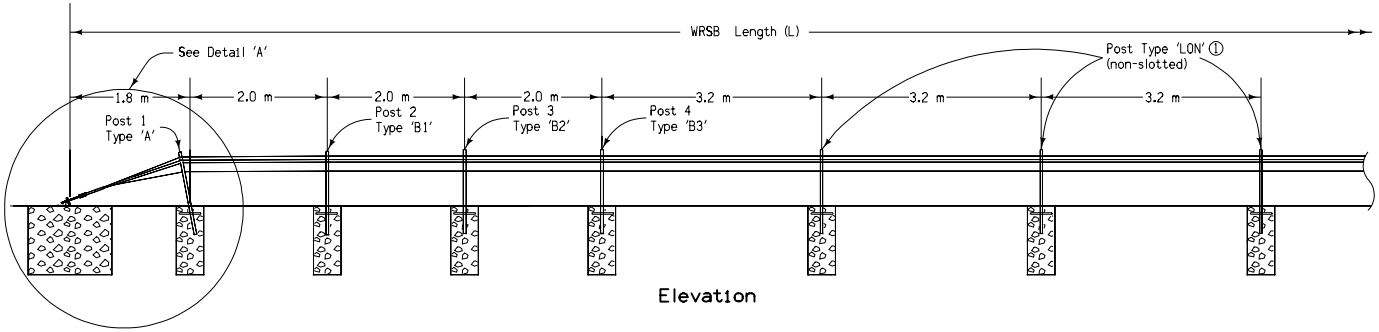

Elevation

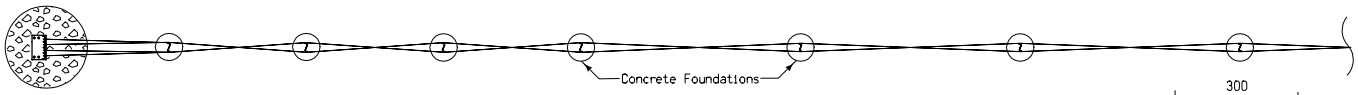

Plan View

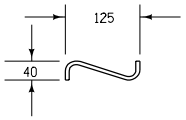

Plan View

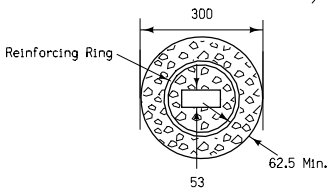

Plan View

① Posts 5 thru 19 are non-slotted line posts.

② Posts 2 thru 4 peg holes are pre-drilled so that rope may be placed on either side of post depending on rope weave pattern.

③ All Type 'A' and 'B' posts shall have amber reflectors on one side (facing traffic).

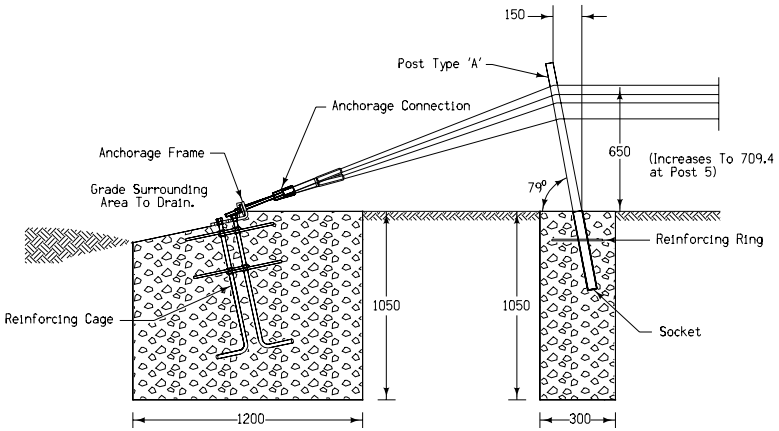

Detail 'A"

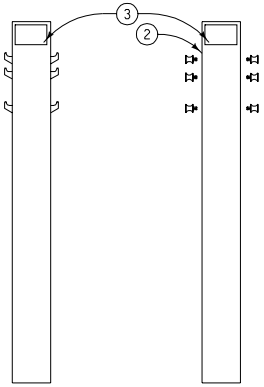

Post Type 'A' Post Type 'B'

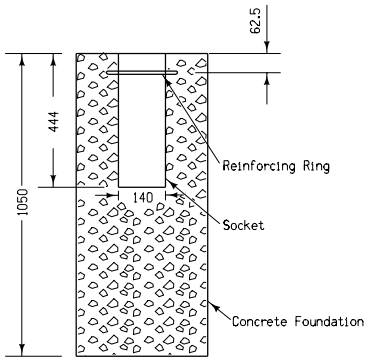

Elevation View

Concrete Foundation
With Socket

(Posts 1 thru 4)

M

METRIC VERSION

Iowa Department of Transportation
Highway Division

STANDARD ROAD PLAN **RE-80(1)**

REVISION: Flatten concrete foundation top.

REVISION NO.	REVISION DATE
1	04-19-05

William J. Stein
APPROVED BY DESIGN METHODS ENGINEER

WIRE ROPE SAFETY BARRIER

(Sheet 1 of 2)