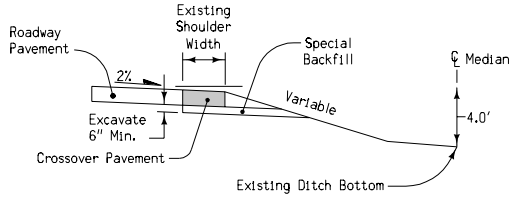

Section A-A

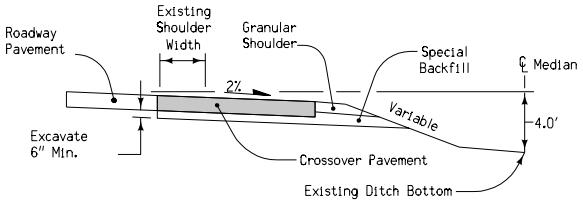

Section B-B

Contract Items:

- Detour Pavement
- Special Backfill
- Granular Shoulder
- Embankment In Place
- Excavation, Class 10, Roadway and Borrow
- Excavation, Class 13, Roadway and Borrow
- Removal of Pavement

Tabulation: 112-8

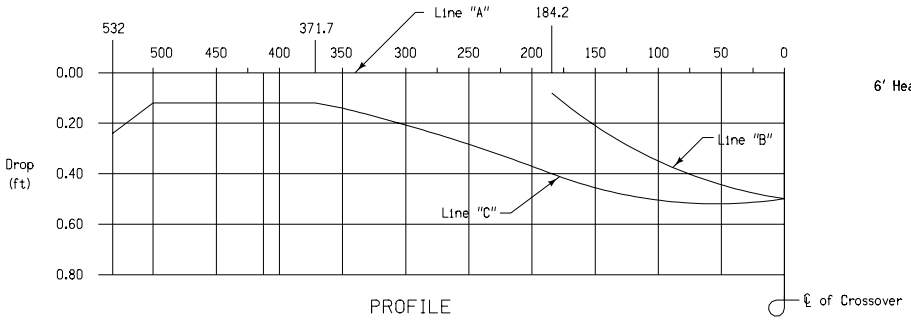

PROFILE

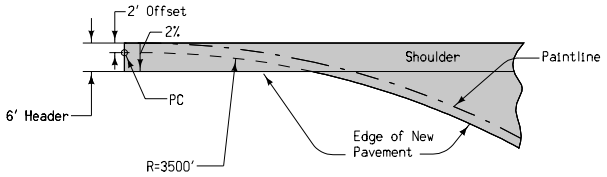

1. Match crossover pavement joints with existing roadway joints. 'CD' joints are required. See Standard Road Plan RH-50.
2. KT-2 Joint, bend bars out for new pavement only.
3. Median crossover is symmetrical at centerline.
4. Median pipe for crossover. See Detail Sheet 500-19.

Design Quantity Table		
Detour Pavement Sq. Yds.	Special Backfill Tons	Granular Shoulder Tons
2080	1310	140

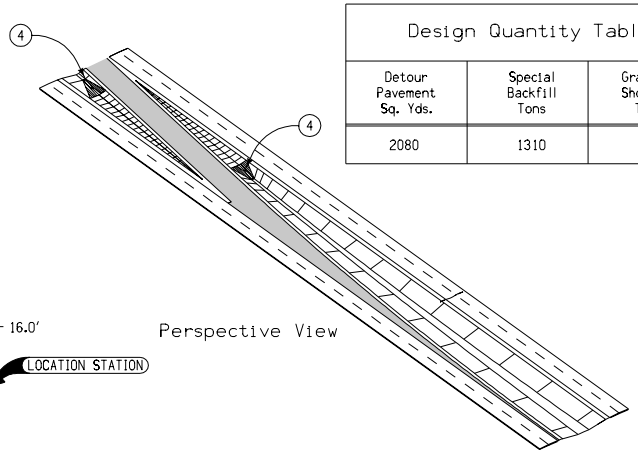

Perspective View

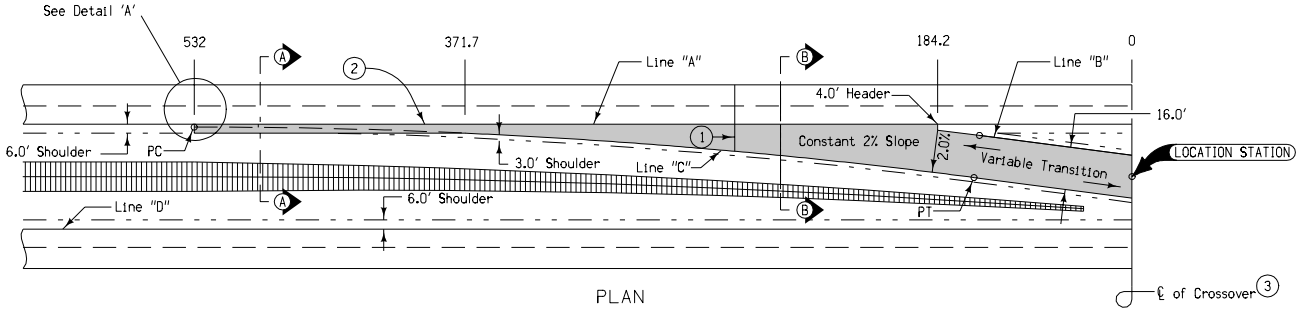

PLAN

Table Of Offsets And Drops																					
Distance (Feet)	532	500	450	400	371.7	350	325	300	275	250	225	200	184.2	175	150	125	100	75	50	25	0
Offset A to C (Feet)	6.00	6.00	6.00	6.00	6.00	7.11	8.55	10.17	11.98	13.96	16.12	18.47	20.00	20.99	23.70	26.59	29.66	32.91	36.21	39.19	42.18
Drop A to C (Feet)	0.24	0.12	0.12	0.12	0.12	0.14	0.17	0.20	0.24	0.28	0.32	0.35	0.40	0.42	0.46	0.48	0.50	0.52	0.52	0.51	0.50
Drop A to B (Feet)													0.08	0.12	0.21	0.29	0.35	0.40	0.44	0.48	0.50

Iowa Department of Transportation
Highway Division

STANDARD ROAD PLAN | **RV-14B**

REVISION: NEW.

REVISION NO. NEW

REVISION DATE 04-19-05

William J. Stein
APPROVED BY DESIGN METHODS ENGINEER

MEDIAN CROSSOVER
(68.24' MEDIAN)
16' WIDE 1 LANE