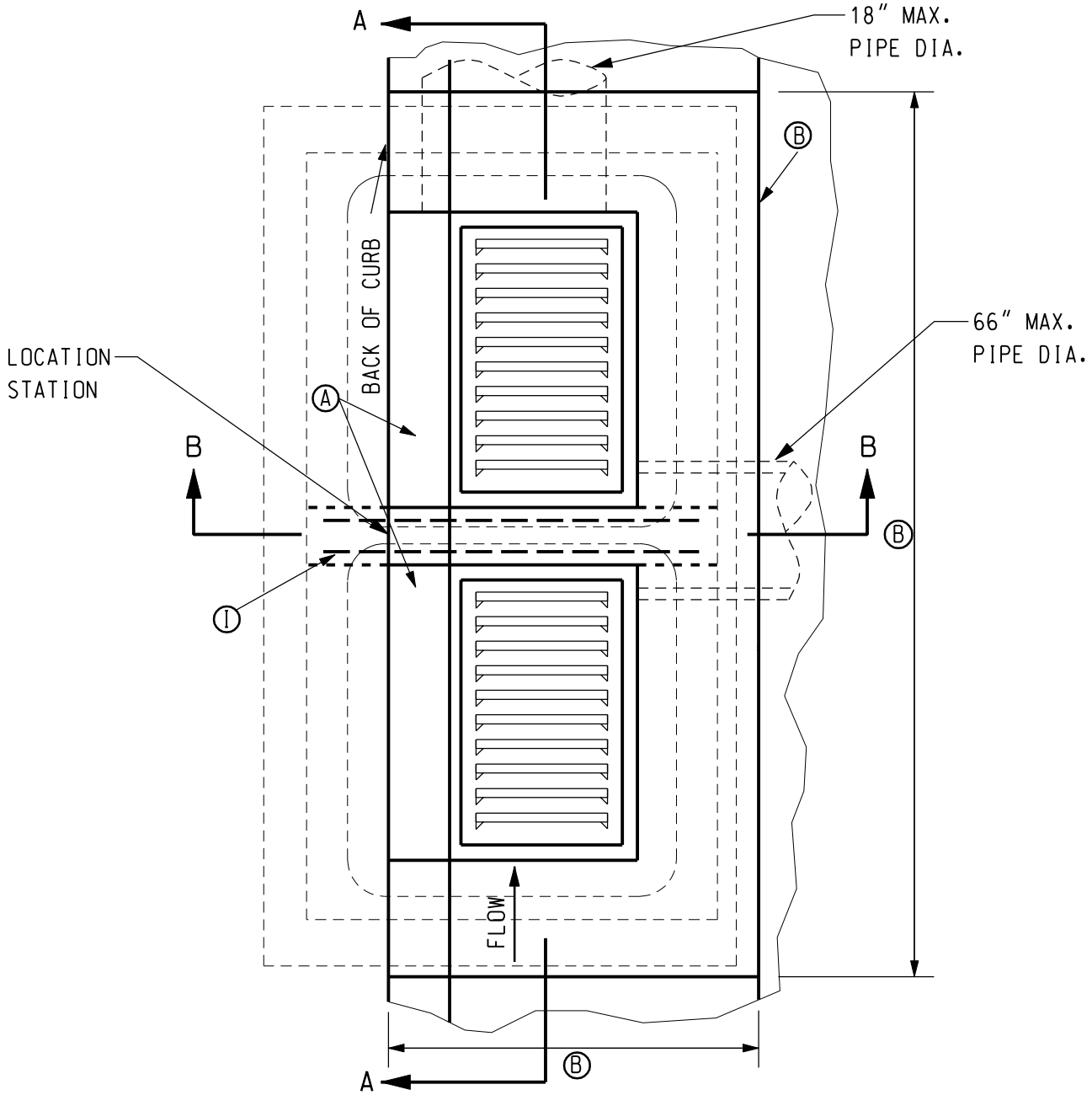

PLAN VIEW

NOTE REFERENCE

Ⓐ INTAKE CASTING (SEE PLANS OR SPECIFICATIONS)

Ⓑ SEE FIGURE 6030.16 FOR BOXOUT DETAIL

Ⓒ CONSTRUCT TO GRADE W/BOX OUT FOR CENTER BEAM

Ⓓ CONSTRUCTION SHALL BE 6" THICK P.C.C. WALL

Ⓔ SHAPED CONCRETE INVERT

Ⓕ CONCRETE BASE - POURED IN PLACE OR PRECASTED

Ⓖ UNDISTURBED SOIL

Ⓗ ADJUSTING RINGS (2'-0" X 3'-0")

Ⓘ PRECAST CONC. BEAM - 4000 PSI CONC. W/4-#4 BARS. 8"x 8"x 3'-0"

FOR ADDITIONAL DETAILS AND NOTES
SEE SHEETS 2 & 3.

REINFORCING BARS:

1. ALL BARS #4
2. WALLS: ONE CURTAIN 12" EACH WAY.

REV.	DATE	BY		
2	10/21/03		DOUBLE, TYPE "M-D" INTAKE	FIGURE:6030.5
DATE: 01-01-98				SHEET 1 OF 3

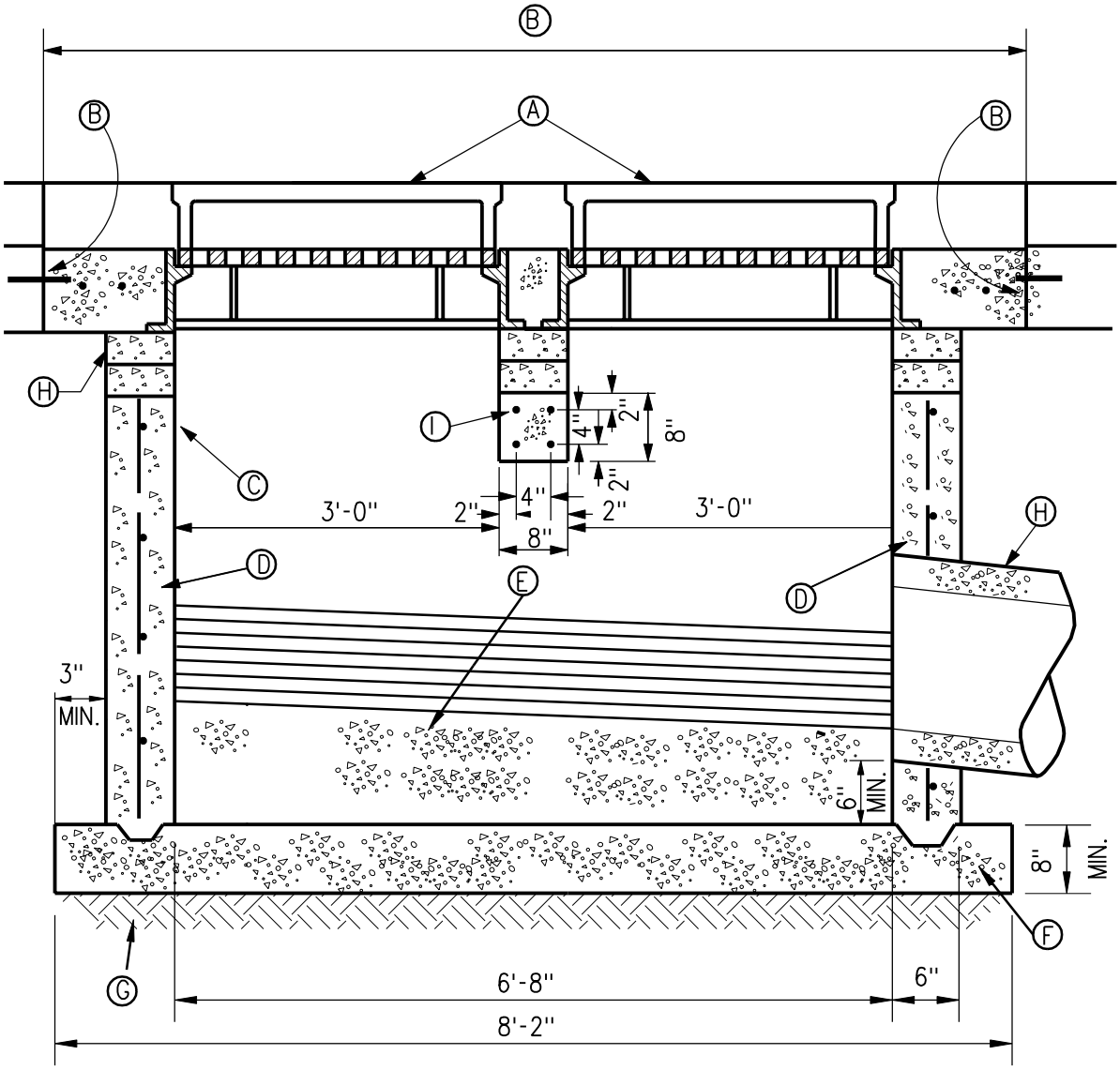

SECTION A-A

PIPE SIZE:

MAXIMUM ALLOWABLE PIPE DIAMETERS SHOWN ARE FOR CAST-IN-PLACE STRUCTURES. FOR PRECAST STRUCTURES, THE MAXIMUM ALLOWABLE DIAMETER SHALL BE ONE (1) STANDARD PIPE SIZE SMALLER THAN THOSE SHOWN. ACTUAL PIPE SIZE SHALL BE AS SHOWN THE PLANS

REV.	DATE	BY		
2	10/21/03		DOUBLE TYPE "M-D" INTAKE	FIGURE: 6030.5
DATE: 01-01-98				SHEET 2 OF 3

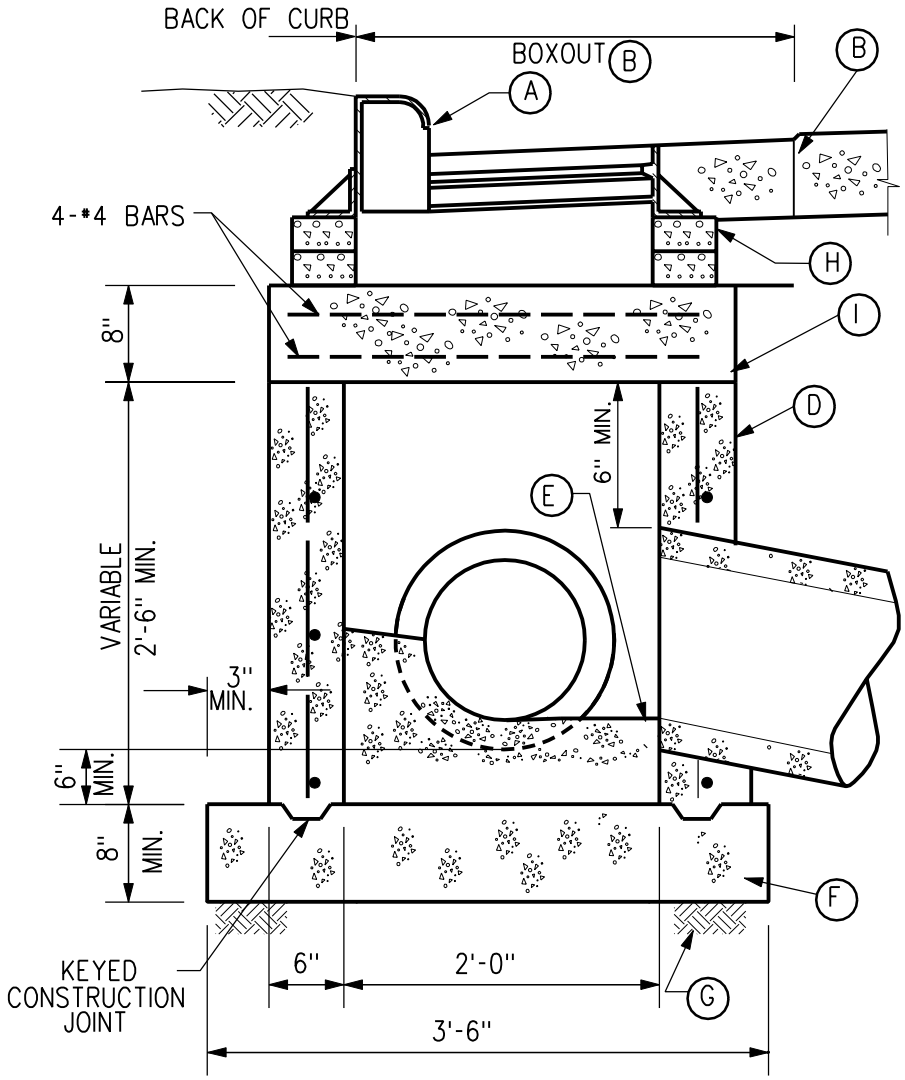

SECTION B-B

3	10/21/03			
REV.	DATE	BY	DOUBLE TYPE "M-D" INTAKE	FIGURE: 6030.5
DATE: 01-01-98				SHEET 3 OF 3