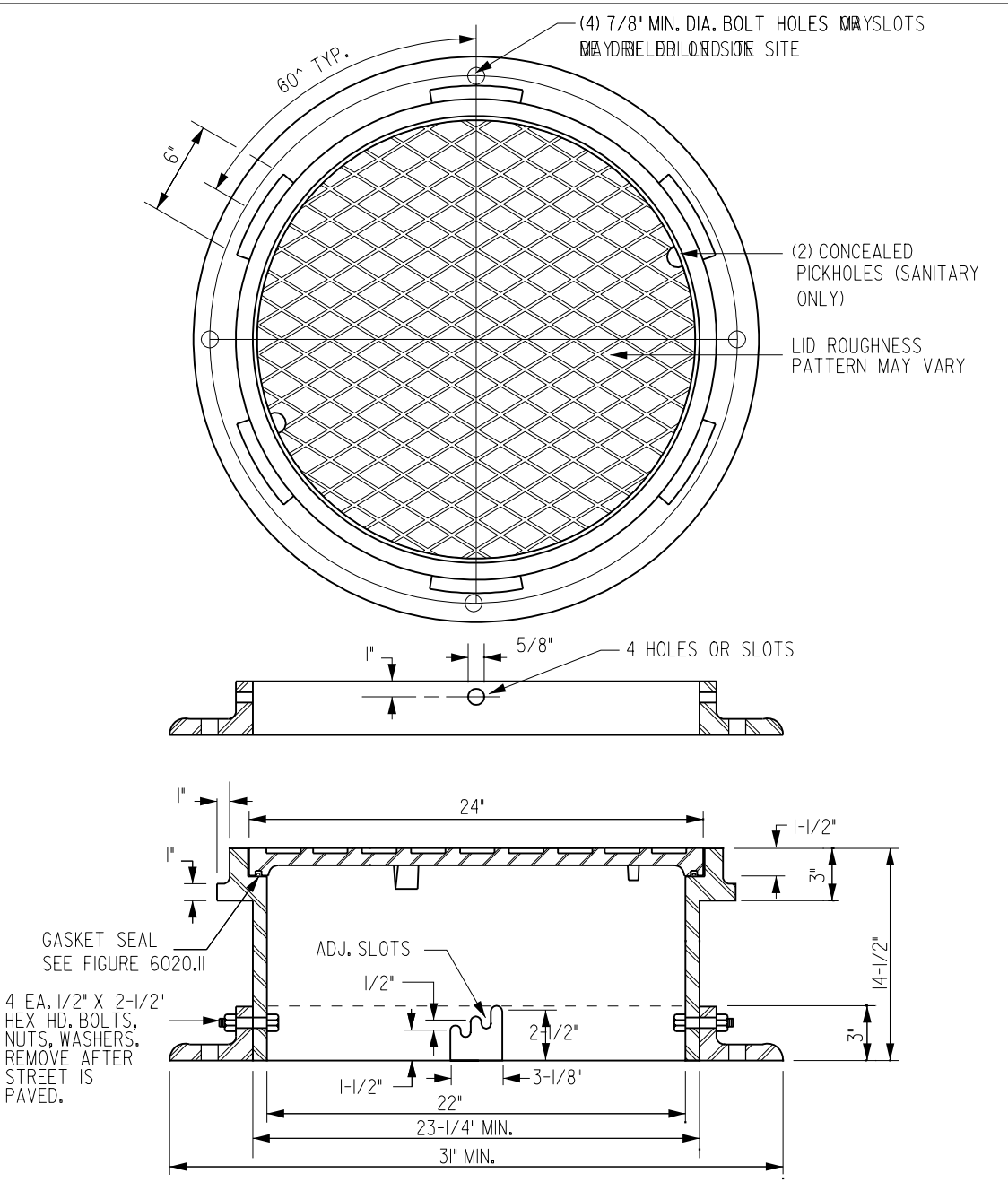

MATERIAL:
CAST GRAY IRON
ASTM A-48 CLASS 35B

REV.	DATE	BY
2	10/2002	
1	01/25/01	

DATE: 01-01-98

TYPE "B" RING AND COVER
(SANITARY SEWER)

FIGURE: 6020.8

SHEET 1 OF 1