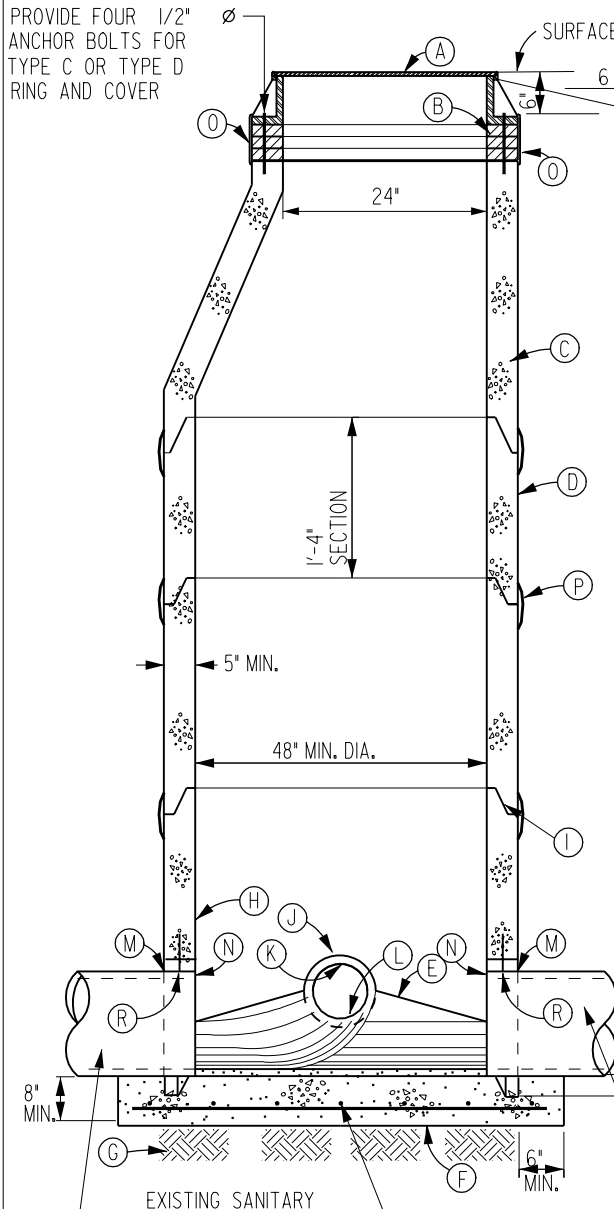

NOTE REFERENCE

- (A) RING & COVER-SEE SPECIFICATIONS
- (B) ADJUSTING RINGS
- (C) ECCENTRIC CONE SECTION
- (D) STANDARD MANHOLE SECTIONS. PROVIDE ONE 1'-4" SECTION.
- (E) CONCRETE FILL, SHAPED INVERT
- (F) CONC. MANHOLE BASE, POURED IN PLACE
- (G) UNDISTURBED SOIL
- (H) BASE SECTION WITH SQUARE EDGED BEARING
- (I) JOINT GASKET
- (J) FLEXIBLE WATERTIGHT PIPE CONNECTION INTEGRAL WITH BASE SECTION
- (K) EXTEND NEW PIPE THROUGH MANHOLE WALL AND TRIM OFF PIPE INSIDE MANHOLE
- (L) VOID BETWEEN PIPE AND MANHOLE SECTION KEEP FREE OF FOREIGN MATERIAL
- (M) WATERTIGHT JOINT AT ARCHED OPENING
- (N) TRIM OFF TOP OF PIPE INSIDE MANHOLE
- (O) CHIMNEY SEAL
  EXTERNAL (SHOWN); ALL APPLICATION OR INTERNAL; PER 6020, 2.06
- (P) APPLY BITUMINOUS JOINT COMPOUND TO OUTSIDE OF EACH SECTION JOINT
- (R) A-LOK

NOTES:

1) MAX. DIA. OF NEW SEWER IS 18". LARGER DIAMETER MAY BE USED WITH JURISDICTIONAL ENGINEER APPROVAL.
2) TO BE USED ONLY WHEN BOTH EXISTING SANITARY LINES WILL REMAIN IN PLACE
3) MIN. DEPTH 7'

REV.	DATE	BY	TYPE "I" MANHOLE (SANITARY SEWER)	FIGURE: 6020.4
1	01/25/01			
DATE: 01-01-98				SHEET 1 OF 1