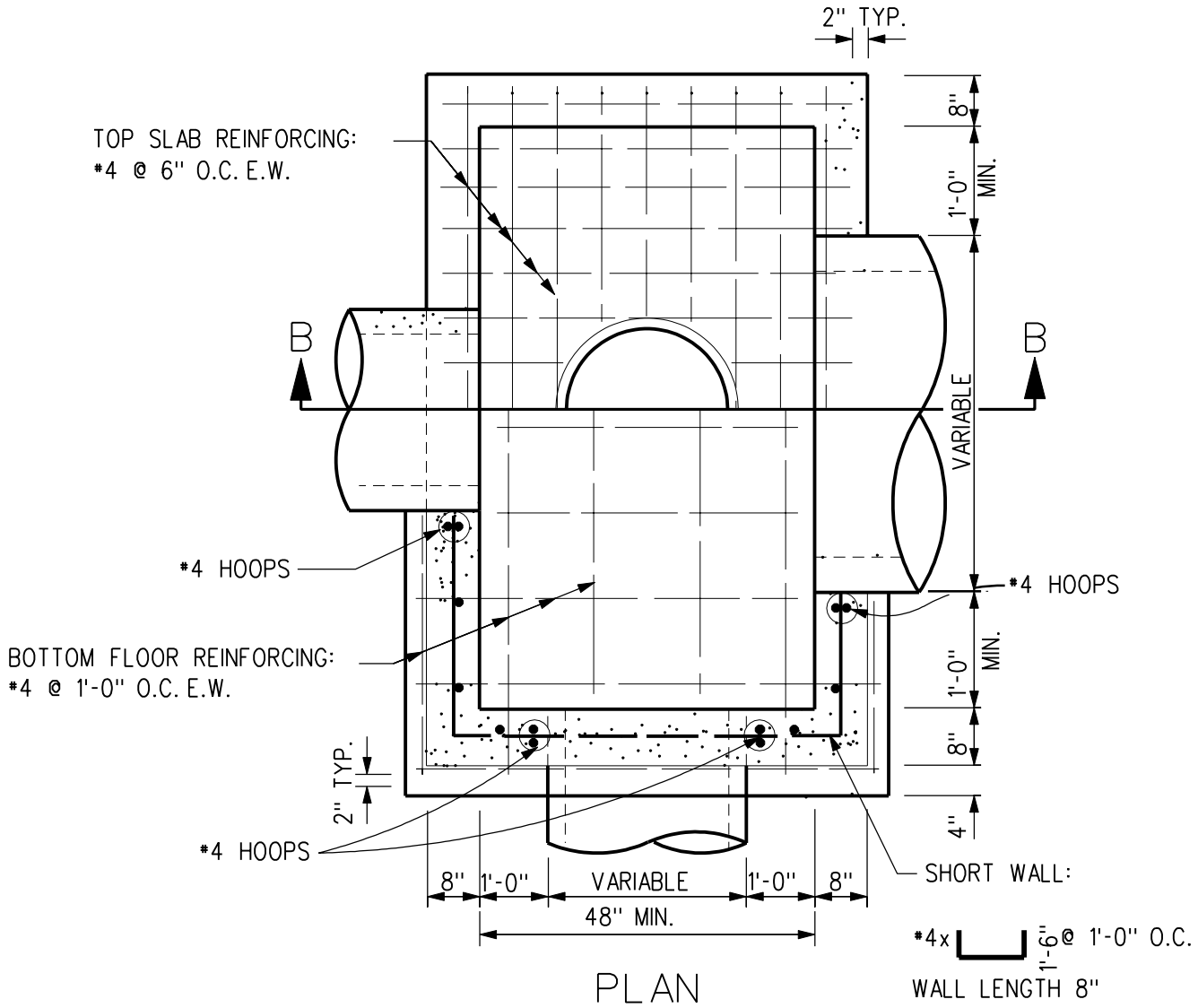

MIN. MANHOLE SIZE

PIPE SIZE INSIDE DIA.	MIN. INSIDE DIM. FOR CORR. SIDE
72"	110"
66"	103"
60"	96"
54"	89"
48"	82"
42"	75"
36"	68"
30"	61"
24"	54"
18" OR LESS	48"
NONE	48"

FOR ADDITIONAL DETAILS SEE SHEET 2.

REV.	DATE	BY	TYPE "E" MANHOLE (SANITARY SEWER)	FIGURE: 6020.2
DATE: 01-01-98				SHEET 1 OF 2

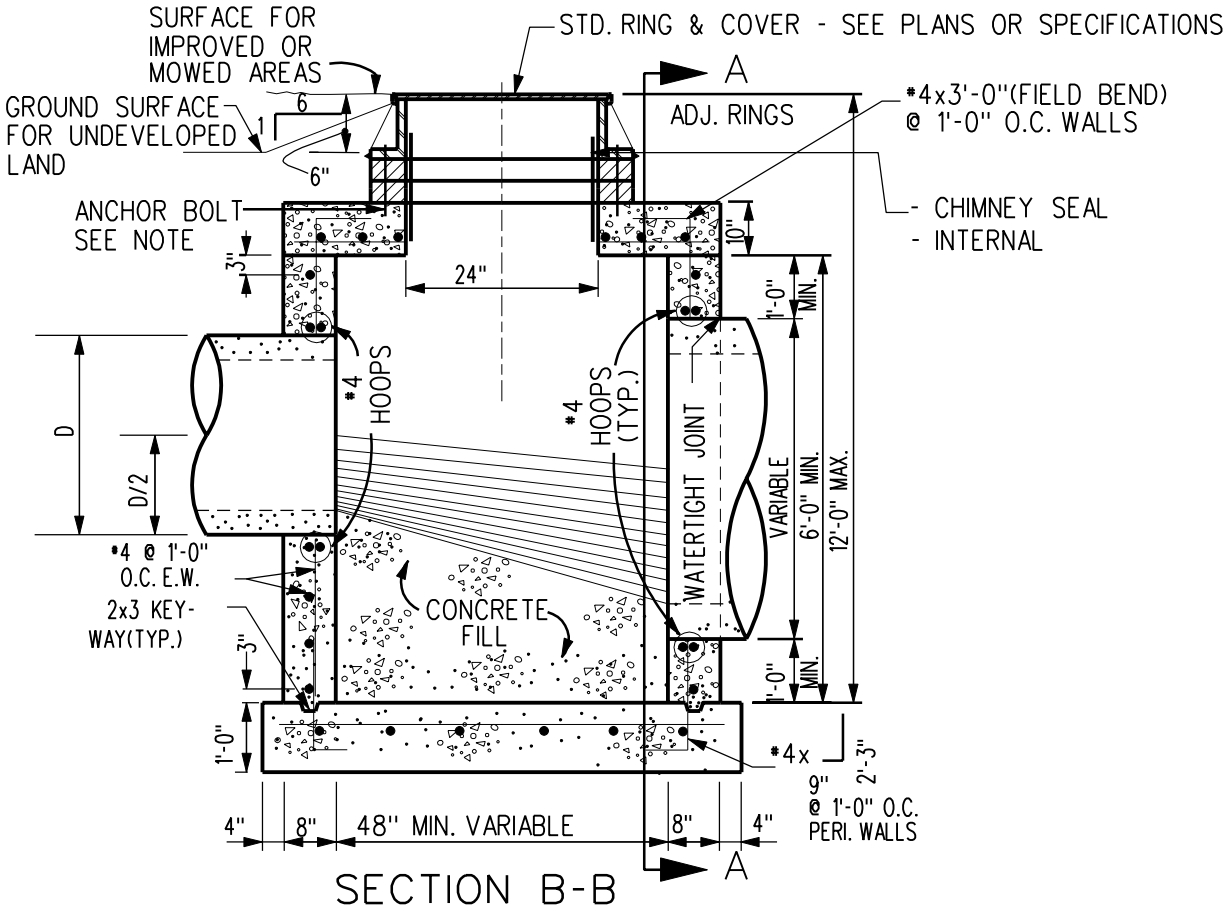

SECTION B-B

NOTE:

MAXIMUM DEPTH - AS NOTED ABOVE.
MINIMUM DEPTH - CHECK FOR PIPE SIZE SPECIFIED.

PROVIDE FOUR 1/2 " ∅ ANCHOR BOLTS FOR TYPE C OR TYPE D RING AND COVER

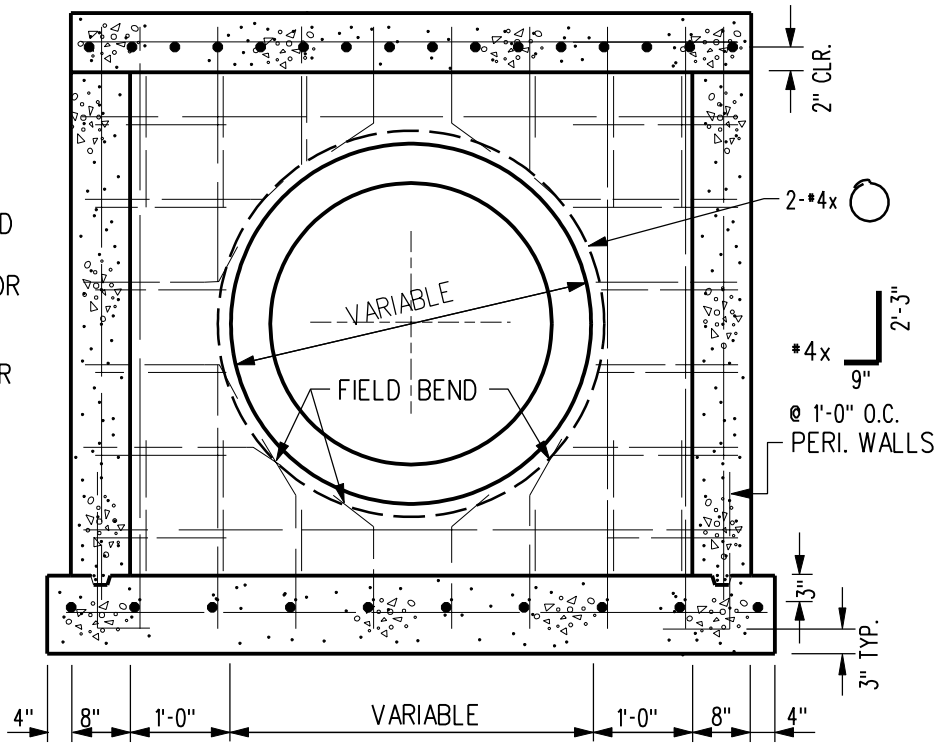

SECTION A-A

REV.	DATE	BY		
1	01/29/03		TYPE "E" MANHOLE (SANITARY SEWER)	FIGURE: 6020.2
DATE: 01-01-98				SHEET 2 OF 2