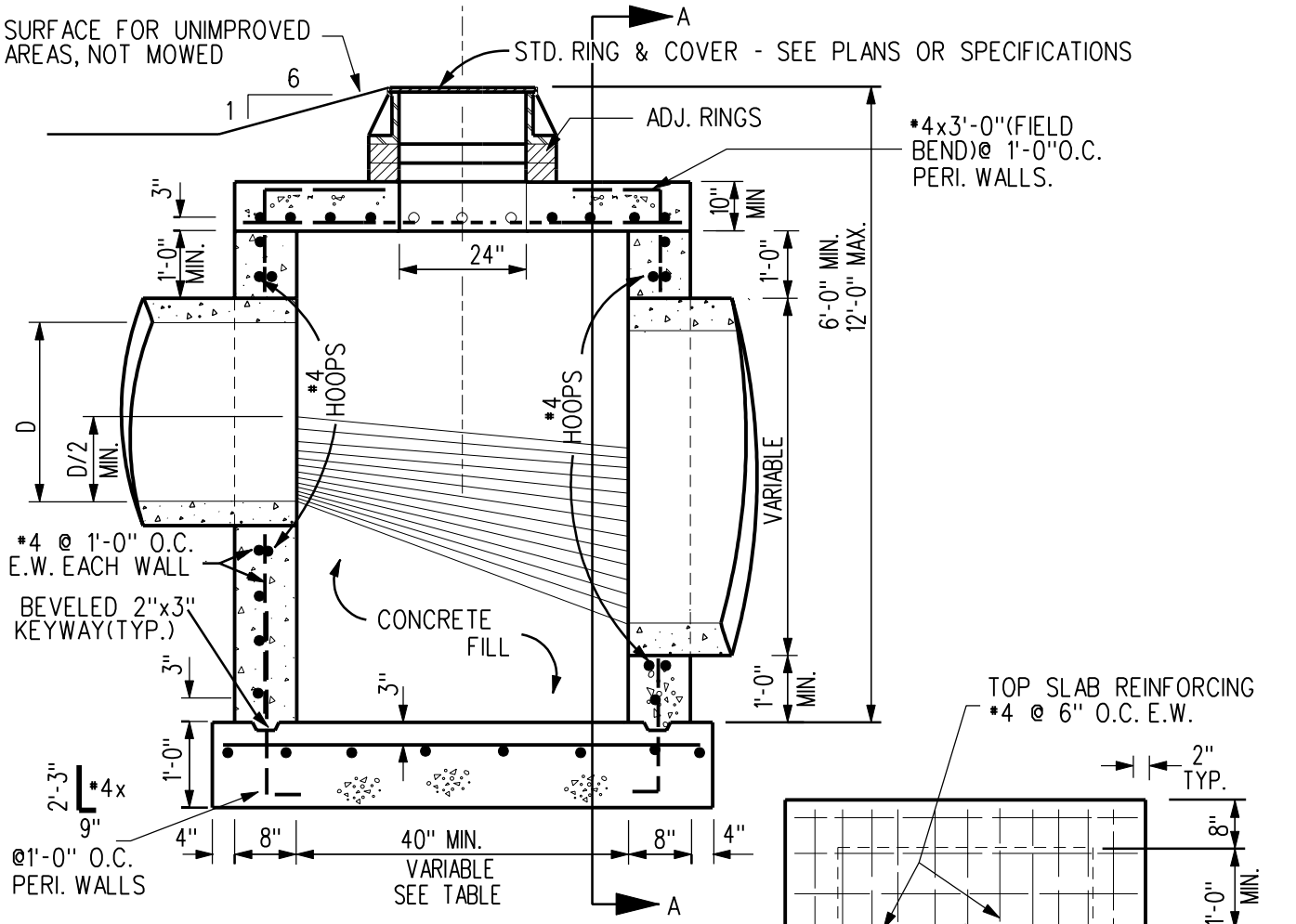

SECTION B-B

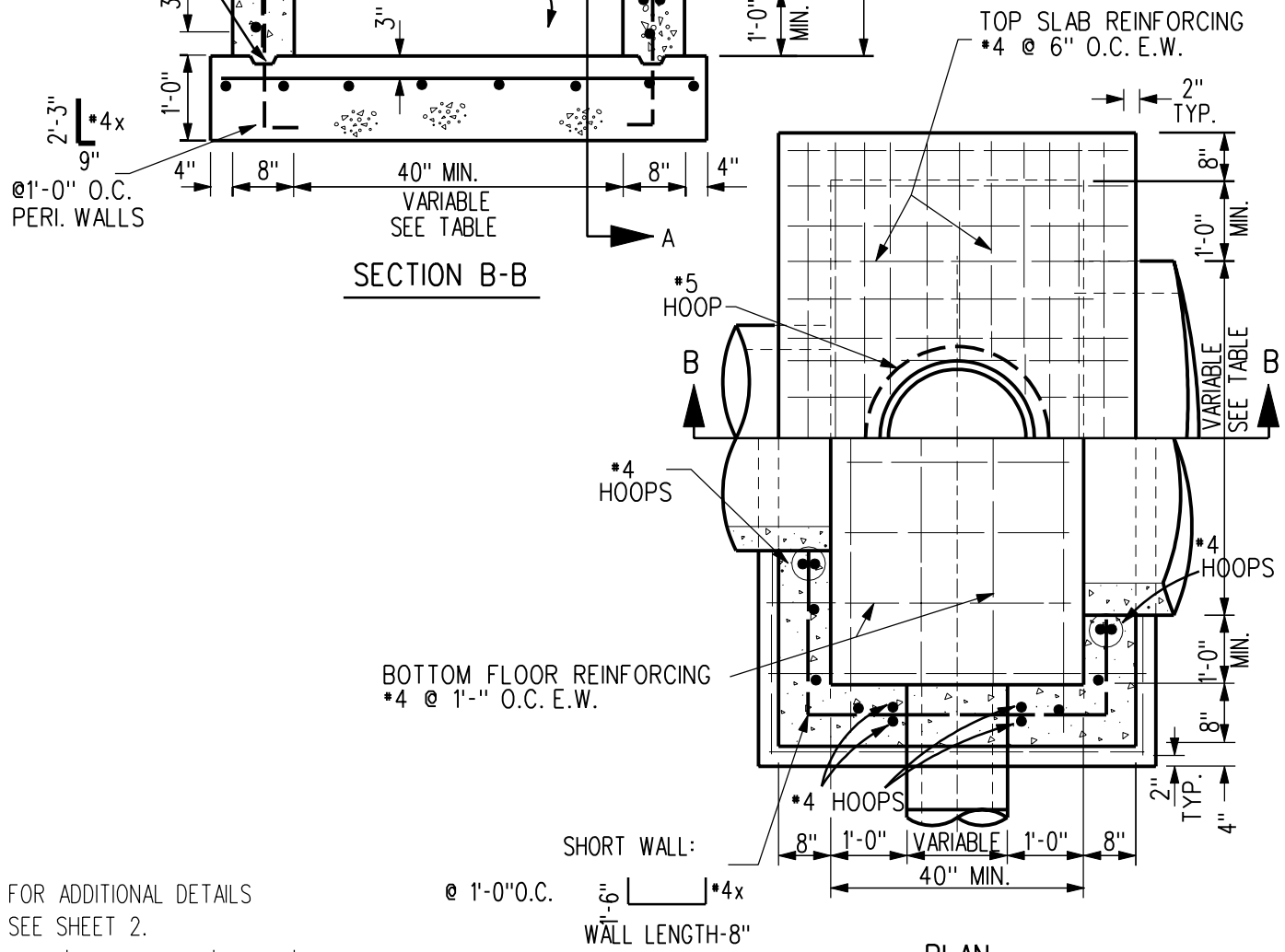

PLAN

FOR ADDITIONAL DETAILS SEE SHEET 2.

REV.	DATE	BY
1	01/29/03	

DATE: 01-01-98

TYPE "M-C" MANHOLE (STORM SEWER)

FIGURE: 6020.14

SHEET 1 OF 2

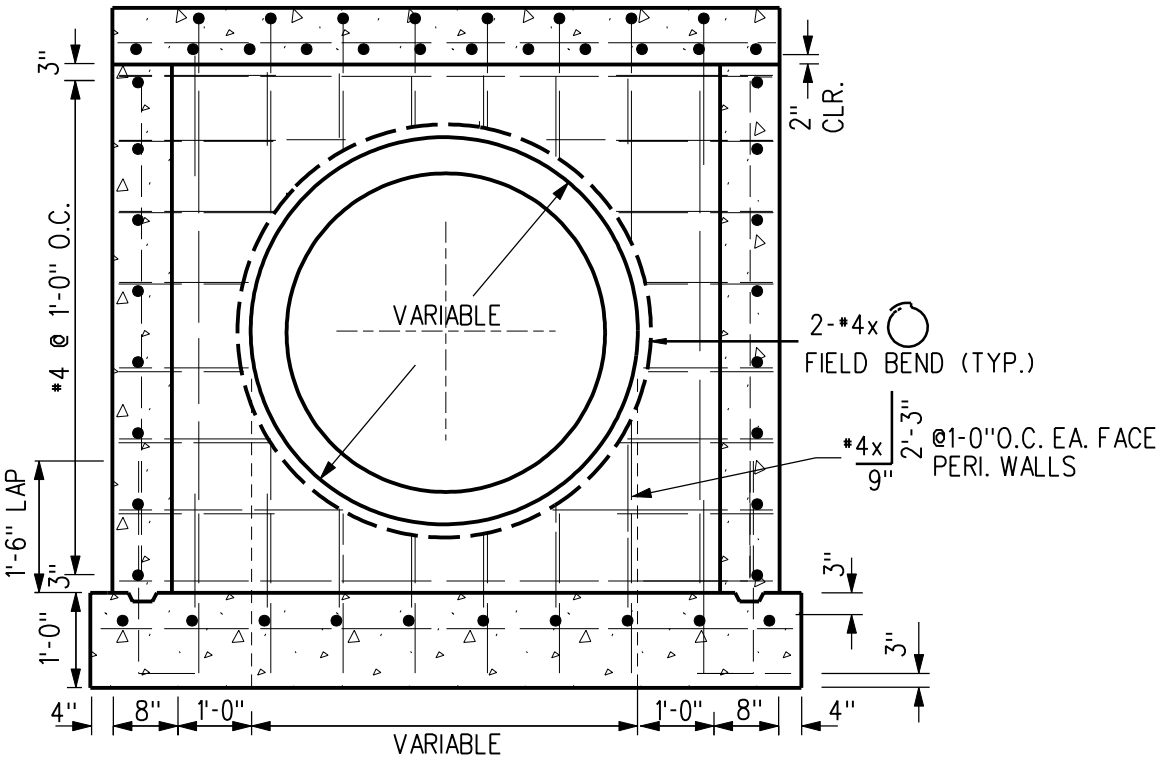

SECTION A-A

NOTE:

MAX. DEPTH AS NOTED ON SHEET 1 OF 2.
MIN. DEPTH-CHECK FOR PIPE SIZE SPECIFIED.

MIN. MANHOLE SIZE

PIPE SIZE INSIDE DIA.	MIN. INSIDE DIM. FOR CORR. SIDE
72"	110"
66"	103"
60"	96"
54"	89"
48"	82"
42"	75"
36"	68"
30"	61"
24"	54"
18"	47"
15"	44"
12"OR LESS	40"
NONE	40"

REV.	DATE	BY	TYPE "M-C" MANHOLE (STORM SEWER)	FIGURE: 6020.14
DATE: 01-01-98				SHEET 2 OF 2