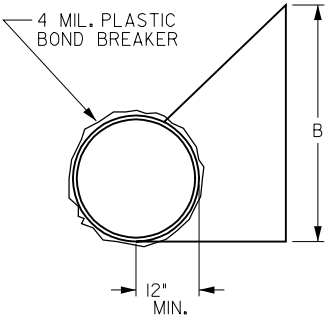

ELEVATION

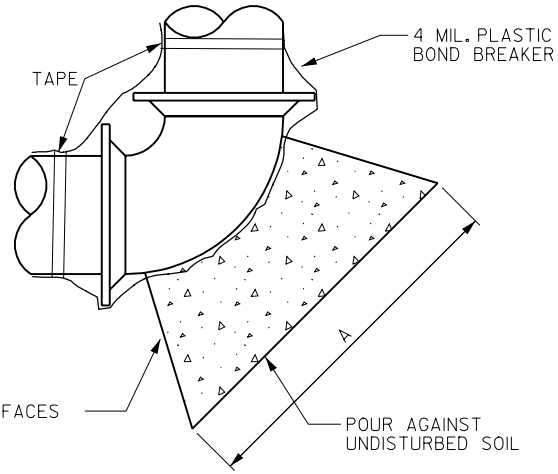

TYPICAL REACTION BLOCK

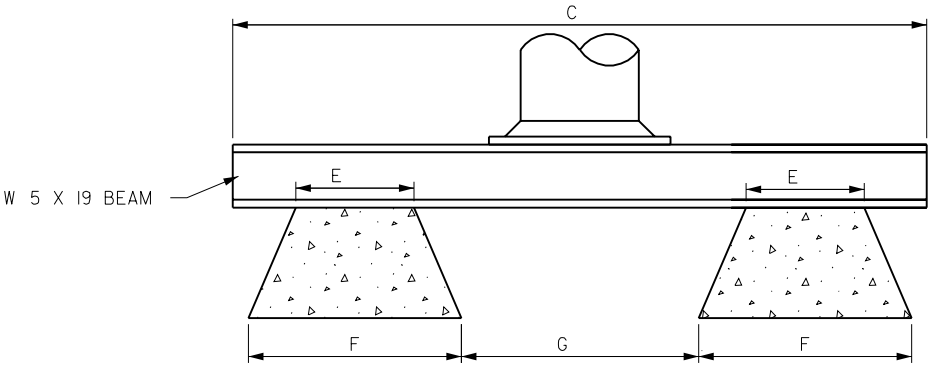

PLAN

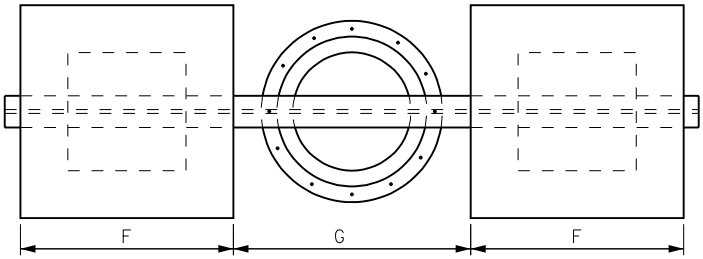

ELEVATION

TYPICAL END BLOCK ASSEMBLY

NOTE:

WRAP 4 MIL. PLASTIC AROUND PIPE & FITTINGS AT ALL LOCATIONS WHERE THEY WILL COME INTO CONTACT WITH CONCRETE.

SIZE	A	B	C	D	E	F	G	V-BAR
6"	1'-3"	1'-0"	3'-9"	4"	0'-9"	1'-0"	2'-0"	
8"	1'-9"	1'-3"	5'-0"	4"	0'-9"	1'-3"	2'-0"	
10"	2'-3"	1'-6"	5'-6"	6"	1'-0"	1'-6"	2'-0"	
12"	3'-3"	1'-9"	6'-6"	8"	1'-3"	1'-9"	2'-6"	
14"	4'-0"	2'-0"	7'-0"	8"	1'-6"	2'-0"	2'-6"	
16"	4'-6"	2'-3"	8'-0"	10"	1'-9"	2'-3"	3'-0"	
18"	5'-0"	2'-9"	10'-0"	10"	2'-3"	3'-0"	3'-3"	
24"	5'-6"	3'-6"	12'-0"	10"	2'-9"	4'-9"	3'-9"	6 @ 12"
30"	6'-0"	4'-0"	15'-0"	10"	3'-0"	6'-0"	4'-0"	6 @ 12"

REV.	DATE	BY	MISCELLANEOUS THRUST BLOCK DETAILS	FIGURE: 5010.ID
DATE: 01-01-98				SHEET 1 OF 1