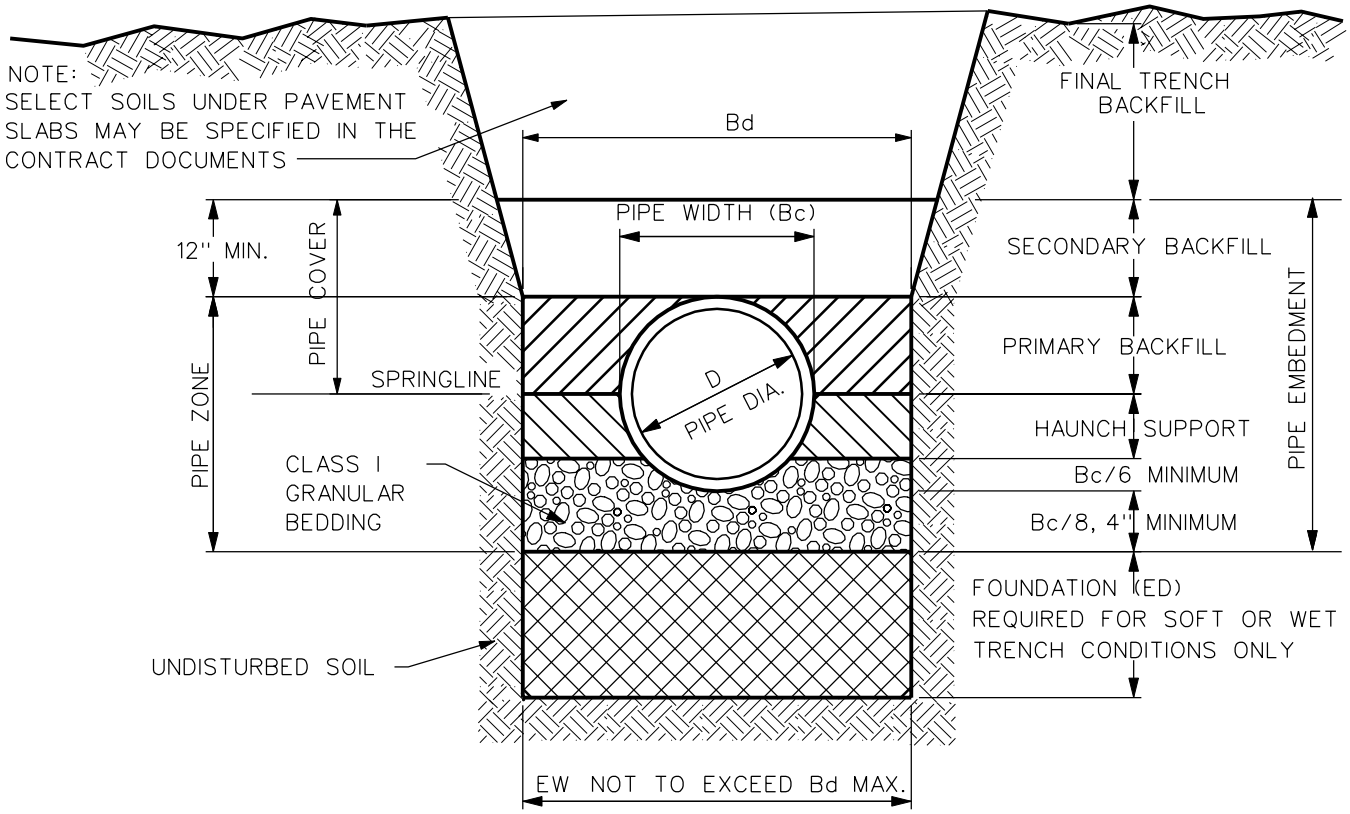

NOTES:

1. HAND PLACED BACKFILL SHALL BE SELECTED, FINELY DIVIDED EXCAVATED MATERIAL FREE FROM DEBRIS, STONES, ORGANIC MATTER OR FROZEN LUMPS AND CAREFULLY COMPACTED.

2. CLEAN CRUSHED STONE FOR BEDDING:
   - 1" MATERIAL FOR PIPE SIZES (D) 18" OR LESS
   - 1 1/2 " MATERIAL FOR PIPE SIZES (D) GREATER THAN 18"
   (SEE SECTION 3010, 2.03)

3. A. TRENCH WIDTH (RIGID PIPE)
   MAX WIDTH: Bd = 1.25(Bc)+1'
   MIN. WIDTH: Bd=Bc+1.5'
   B. TRENCH WIDTH (SEMI-RIGID AND FLEXIBLE PIPE)
   MIN. WIDTH: Bd=1.25(Bc)+1'
   OR: Bd = Bc+1.5'
   C. TRENCH WIDTH REQUIREMENTS MAY BE MODIFIED BY JURISDICTIONAL ENGINEER BASED UPON SITE CONDITIONS
   Bd = TRENCH WIDTH AT TOP OF PIPE
   EW=EXCAVATION WIDTH AT BOTTOM OF TRENCH

   DEPTH OF BEDDING MATERIAL BELOW PIPE = BC/8, 4" MINIMUM

4. FOUNDATION ROCK (CLEAN CRUSHED STONE - 2 1/2 " MATERIAL) WHEN REQUIRED SHALL BE PLACED BELOW NORMAL BEDDING. MEASUREMENT FOR FOUNDATION ROCK SHALL BE IN TONS. MEASUREMENT FOR OVER EXCAVATION SHALL BE MADE IN CUBIC YARDS (LENGTH X EW X ED) AND PAID AT THE UNIT PRICE BID

5. FOR ROCK EXCAVATION, THE TRENCH SHALL BE OVER EXCAVATED A MINIMUM OF 6" AND REFILLED WITH NORMAL BEDDING.

COMPACTION REQUIREMENTS	
BACKFILL	% COMPACTION
FINAL	95%
PRIMARY OR SECONDARY	CLASS II - 90% CLASS III - 95% CLASS IVA - 95%
HAUNCH	90%
PIPE BEDDING	90%

REV.	DATE	BY		
2	01/29/03		PIPE EMBEDMENT DETAILS	FIGURE: 3010.1
DATE: 01-01-98				SHEET 1 OF 3

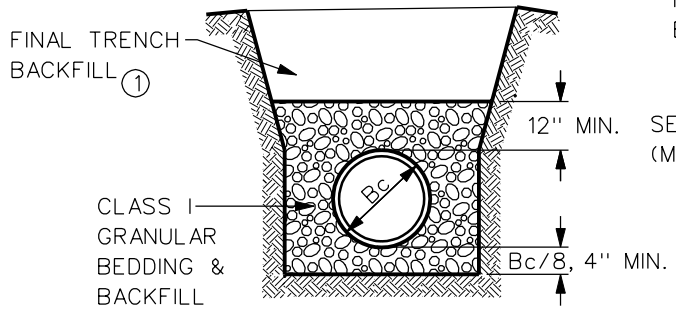

TYPE A-1 PIPE EMBEDMENT
(GRANULAR EMBEDMENT 1' ABOVE TOP OF PIPE)

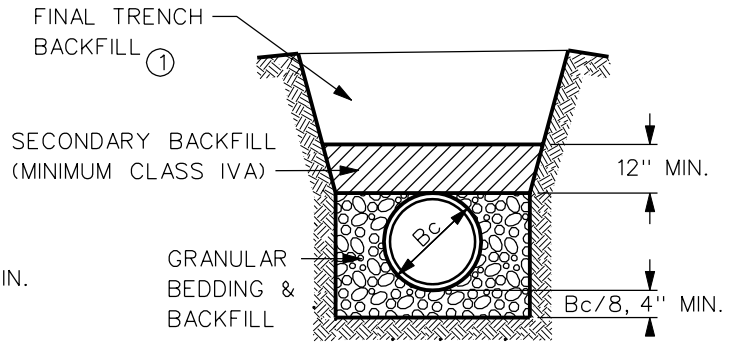

TYPE CSE PIPE EMBEDMENT
(CRUSHED STONE ENCASEMENT)

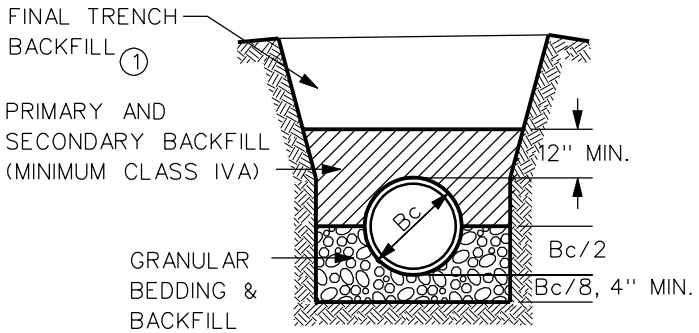

TYPE B PIPE EMBEDMENT

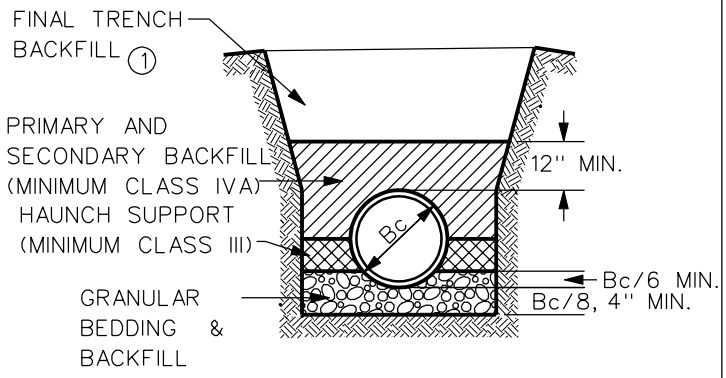

TYPE C PIPE EMBEDMENT

(1) FINAL TRENCH BACKFILL SHALL BE MINIMUM CLASS IV A. CLASS IVB MAY BE USED IF APPROVED BY THE JURISDICTIONAL ENGINEER. PLACE CLASS II MATERIAL BELOW THE FINAL TOP 2' OF BACKFILL UNDER PAVEMENT SLABS.

- THE CLASS OF MATERIAL STATED IS THE MINIMUM ALLOWED. HIGHER QUALITY MATERIALS (AS REPRESENTED BY LOWER CLASS NUMBERS) MAY ALSO BE USED. SEE SECTION 3010, 2.03 - 2.08 FOR MATERIAL PROPERTIES.

1	01/29/03		SEE SHEET 3 FOR CHART	
REV.	DATE	BY	PIPE EMBEDMENT DETAILS	FIGURE: 3010.1
DATE: 01/25/01				SHEET 2 OF 3

	Type of Pipe	Material	Use	Allowable Depth of Fill Above Top of Pipe: TYPE C EMBED.	TYPE B EMBED.	CSE EMBED.	TYPE A-1 EMBEDMENT
Rigid	Pipe Stiffness >651 psi	RCP; ASTM C 76 Class III; 12"-24"	Storm, Gravity	Up to 8'	Up to 10'	Up to 10'	Up to 10'
		RCP; ASTM C 76 Class III; 27"-84"	Storm, Gravity	Up to 10'	Up to 13'	Up to 13'	Up to 13'
		RCP; ASTM C 76 Class IV; 12"-24"	Storm, Gravity	Up to 12'	Up to 16'	Up to 16'	Up to 16'
		RCP; ASTM C 76 Class IV; 24"-27"	Storm, Gravity	Up to 16'	Up to 23'	Up to 23'	Up to 23'
		RCP; ASTM C 76 Class V; 12"-21"	Storm, Gravity	Up to 19'	Up to 25'	Up to 25'	Up to 25'
		RCP; ASTM C 76 Class V; 24"-84"	Storm, Gravity	Up to 30'	Up to 40'	Up to 40'	Up to 40'
		RCAP; ASTM C 506 (Class A III); 18"-84" Equiv.	Storm, Gravity				Up to 13'
		RCEP; ASTM C507 (Class HE III); 18"-84" Equiv.	Storm, Gravity				Up to 9'
		RCEP; ASTM C507 (Class VE IIII); 36"-84" Equiv.	Storm, Gravity				Up to 13'
		Ductile Iron; AWWA C151 (Class 52); 8"-54"	Sanitary, Gravity	Up to 50', No Bedding Required			
		Ductile Iron; AWWA C151 (Class 52); 4"-64"	Sanitary, Force Main	Up to 50', No Bedding Required			
		Extra Strength, VCP; ASTM C 700 8"-10"	Sanitary, Gravity	Up to 16'	Up to 20'	Up to 24'	Up to 24'
		Extra Strength, VCP; ASTM C 700 12"-21"	Sanitary, Gravity	Up to 12'	Up to 15'	Up to 18'	Up to 18'
		Extra Strength, VCP; ASTM C 700 24"-42"	Sanitary, Gravity	Up to 13'	Up to 18'	Up to 23'	Up to 23'
Semi-Rigid	Pipe Stiffness 151 psi to 650 psi	PVC; ASTM D 3034 (SDR 23.5); 8"-15"	Sanitary, Gravity			Up to 30'	Up to 30'
		PVC; ASTM D 2680 (Truss); 8"-15"	Sanitary, Gravity			Up to 30'	Up to 30'
		PVC; AWWA C900 (DR18); 4"-12"	Sanitary, Force Main	Up to 30', No Bedding Required			
		PVC; AWWA C905 (DR18); 14"-24"	Sanitary, Force Main	Up to 30', No Bedding Required			
Flexible	Pipe Stiffness 46 psi to 150 psi	PVC; ASTM D 3034 (SDR 35 & 26); 8"-15"	Sanitary, Gravity				Up to 30'
		PVC; ASTM F 679 (T-1 Wall); 18"-27"	Sanitary, Gravity				Up to 30'
		PVC; ASTM F 949 ; 8"-36"	Sanitary, Gravity				Up to 30'
		PVC; ASTM F 1803 (Closed Profile); 21"-36"	Sanitary, Gravity				Up to 30'
		PVC; ASTM F 949 ; 12"-36"	Storm, Gravity			Up to 30'	Up to 30'
		HDPE; AASHTO M 294 ; 12"	Storm, Gravity				Up to 11'
	Pipe Stiffness 22 psi to 45 psi	HDPE; AASHTO M 294 ; 15"-36"	Storm Gravity				Up to 11'

Notes:
- Lined reinforced concrete pipe (LRCP), used for sanitary sewer applications, shall follow depth requirements of RCP (minimum Class IV).
- Allowable depth of bury may be modified by Jurisdictional Engineer based upon site conditions and installation methods.
- Water Main Pressure Pipe: In areas where sand or other suitable soil backfill is available, Water Main Pressure Pipe (excluding PE Pipe) may be backfilled with these natural materials (Class I material not required) using a flat trench bottom and bell hole shaping.

REV.	DATE	BY
2	01/29/03	

DATE: 01/25/01

PIPE EMBEDMENT DETAILS

FIGURE: 3010.1