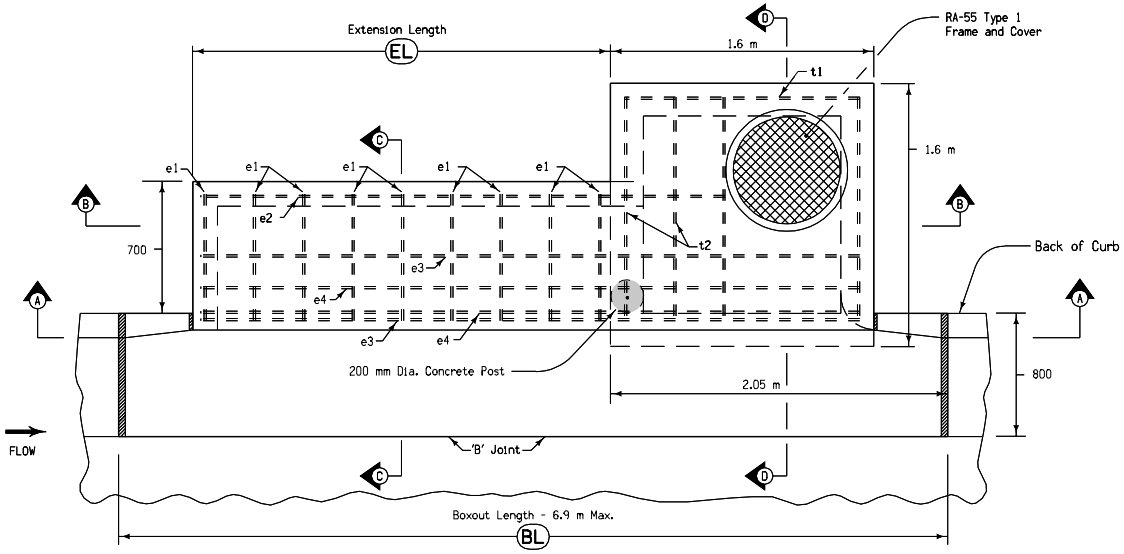

PLAN VIEW
TOP REINFORCING PLACEMENT

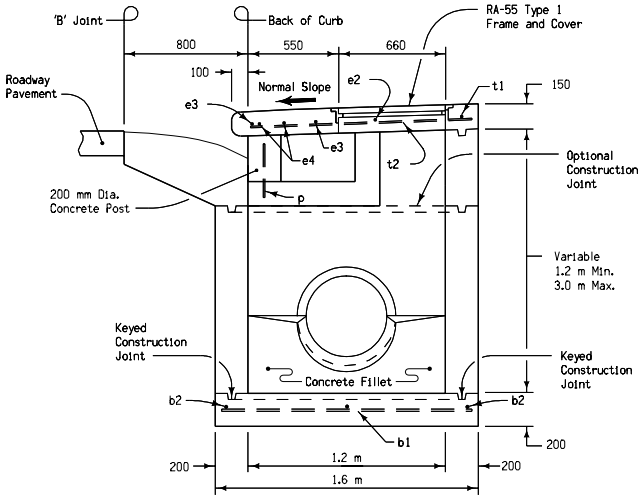

SECTION D-D

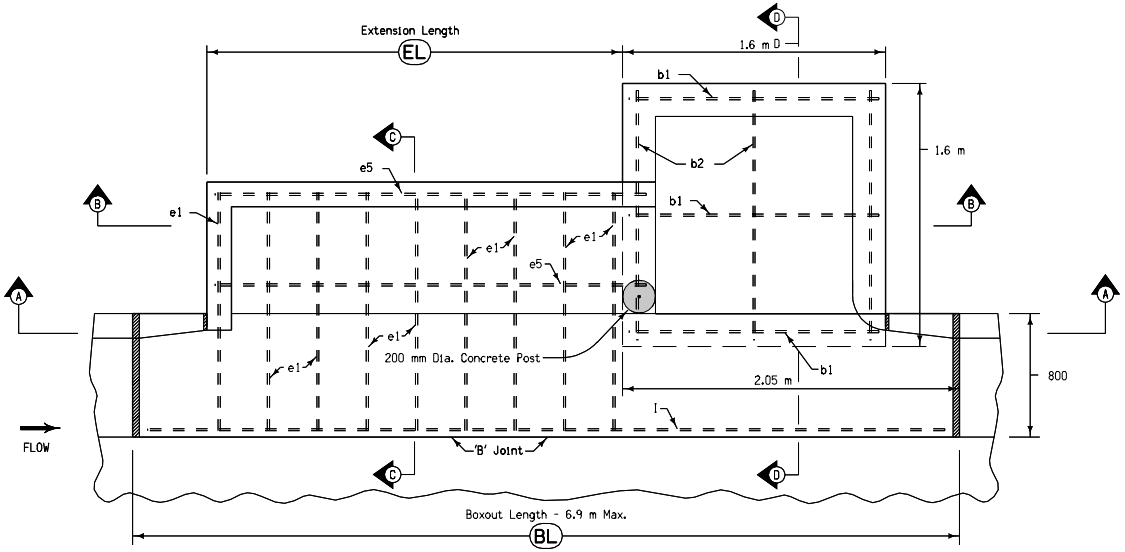

PLAN VIEW
BOTTOM REINFORCING PLACEMENT

REINFORCING BAR LIST Intake Well						
SIZE	MARK	LOCATION	NO.	LENGTH	MASS	SPACING
15	b1	Base	3	1500	7.1	710
15	b2	Base	3	1500	7.1	710
15	t1	Top	1	1500	2.4	
15	t2	Top	4	1360	8.5	See Detail
15	p	Post	1	330	0.5	
				Total	25.6 Kg	

All dimensions given in millimeters unless noted.

M

METRIC VERSION

Iowa Department of Transportation
Highway Division

STANDARD ROAD PLAN **RA-70(2)**

REVISION: Added special shaping of insert.

REVISION NO.
1
REVISION DATE
10-29-02

William J. Stein
APPROVED BY DESIGN METHODS ENGINEER

CURB INTAKE WITH
EXTENDED OPENING
(SHEET 2 OF 3)