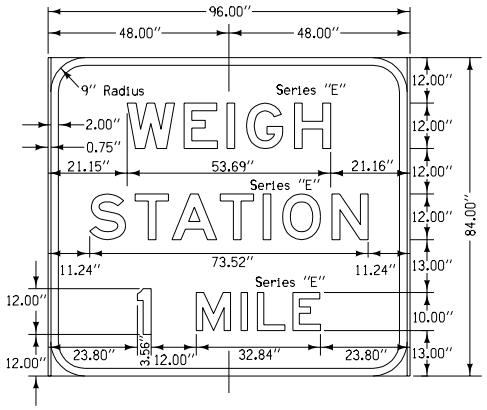

W 12.56	2.48	E 8.81	2.48	I 2.06	3.09	G 9.56	3.09	H 9.56				
S 9.56	2.48	T 8.81	0.82	A 12.00	0.82	T 8.81	2.48	I 2.06	3.09	O 9.94	3.09	N 9.56
1 3.56	12.00	M 9.22	2.58	I 1.72	2.58	L 7.34	2.06	E 7.34				

D8-1C

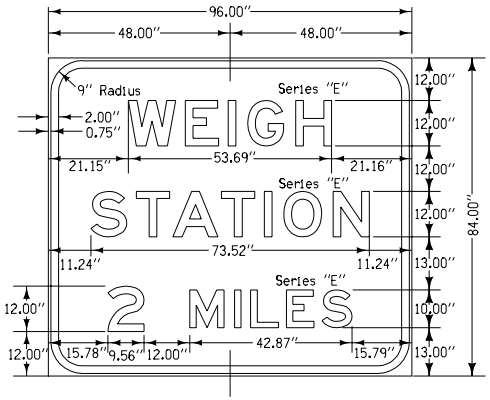

W 12.56	2.48	E 8.81	2.48	I 2.06	3.09	G 9.56	3.09	H 9.56				
S 9.56	2.48	T 8.81	0.82	A 12.00	0.82	T 8.81	2.48	I 2.06	3.09	O 9.94	3.09	N 9.56
2 9.56	12.00	M 9.22	2.58	I 1.72	2.58	L 7.34	2.06	E 7.34	2.06	S 7.97		

D8-1D

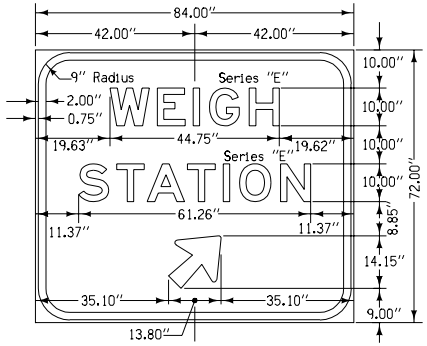

Arrow Code 3 - 17¼ - 45°

W 10.47	2.06	E 7.34	2.06	I 1.72	2.58	G 7.97	2.58	H 7.97				
S 7.97	2.06	T 7.34	0.68	A 10.00	0.68	T 7.34	2.06	I 1.72	2.58	O 8.28	2.58	N 7.97

D8-3H

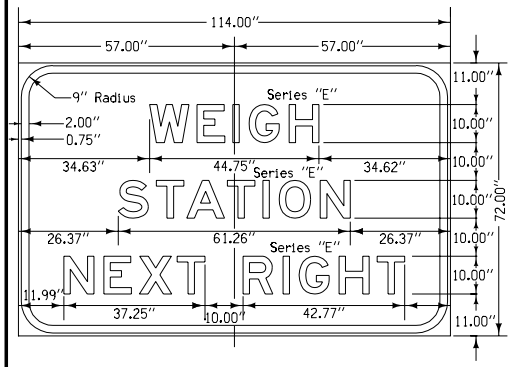

W 10.47	2.06	E 7.34	2.06	I 1.72	2.58	G 7.97	2.58	H 7.97				
S 7.97	2.06	T 7.34	0.68	A 10.00	0.68	T 7.34	2.06	I 1.72	2.58	O 8.28	2.58	N 7.97
N 7.97	2.58	E 7.34	2.06	X 8.59	1.37	T 7.34						
R 7.97	2.58	I 1.72	2.58	G 7.97	2.58	H 7.97	2.06	T 7.34				

D8-2B

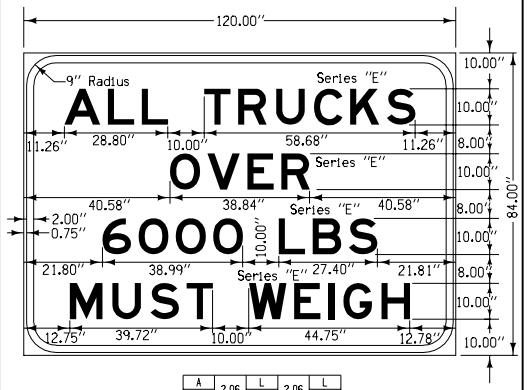

A 10.00	2.06	L 7.34	2.06	L 7.34								
T 7.34	2.06	R 7.97	2.58	U 7.97	2.58	C 7.97	2.06	K 8.12	2.06	S 7.97		
O 8.28	2.06	V 9.07	2.06	E 7.34	2.06	R 7.97						
G 7.97	2.06	O 8.28	2.06	O 8.28	2.06	D 8.28						
L 7.34	2.06	B 7.97	2.06	S 7.97								
M 9.22	2.58	U 7.97	2.58	S 7.97	2.06	T 7.34						
W 10.47	2.06	E 7.34	2.06	I 1.72	2.58	G 7.97	2.58	H 7.97				

R13-2

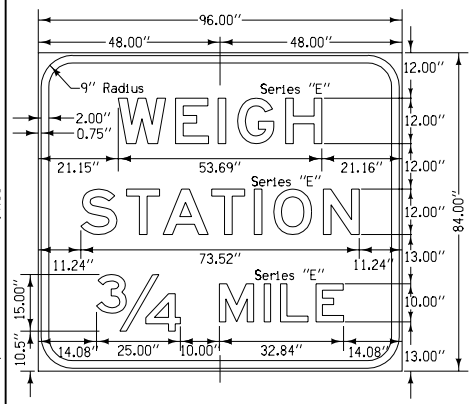

W 12.56	2.48	E 8.81	2.48	I 2.06	3.09	G 9.56	3.09	H 9.56				
S 9.56	2.48	T 8.81	0.82	A 12.00	0.82	T 8.81	2.48	I 2.06	3.09	O 9.94	3.09	N 9.56
M 9.22	2.58	I 1.72	2.58	L 7.34	2.06	E 7.34						

D8-1B

NOTES:
These signs are all Type "B" signs and shall be fabricated with backing material composed of metal sign panels and shall have detachable copy.

Letter width and interletter spacing:
As shown in the charts below the signs.
Dimensions are shown in inches.

Color -- Signs D8-1B, D8-1C, D8-1D, D8-2B, and D8-3H:
Letters, numerals, symbols and borders shall be smooth silver reflective sheeting on cutout sheet metal base material.
Background shall be smooth green reflective sheeting.

-- Sign R13-2:
Letters and border shall be black nonreflective sheeting on cutout sheet metal base material. Background shall be smooth silver reflective sheeting.

Iowa Department of Transportation
Highway Division

STANDARD ROAD PLAN | **RD-52**

REVISION: NEW

REVISION NO. NEW

REVISION DATE 04-15-03

William J. Stein
APPROVED BY DESIGN METHODS ENGINEER

TYPE 'B' INTERSTATE
WEIGH STATION & REGULATORY SIGNS