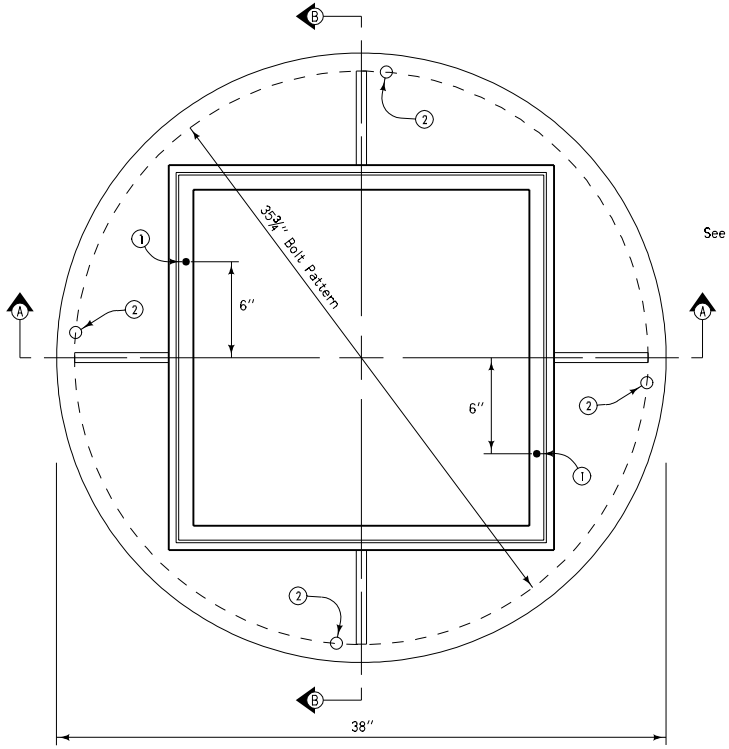

PLAN

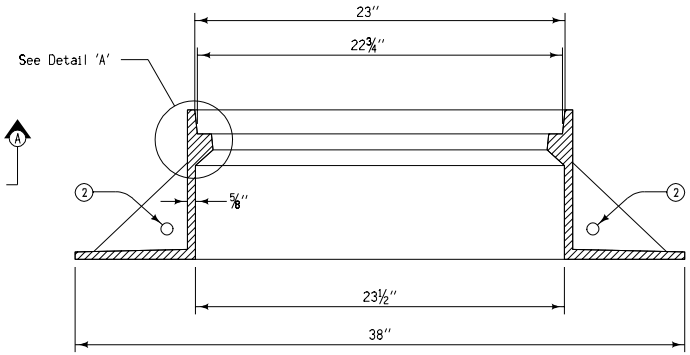

SECTION A-A

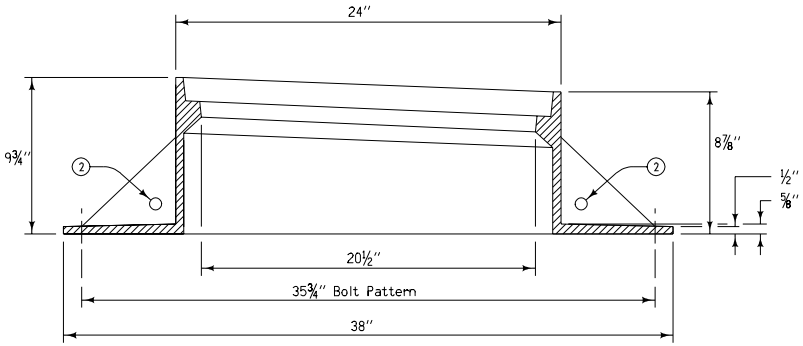

SECTION B-B

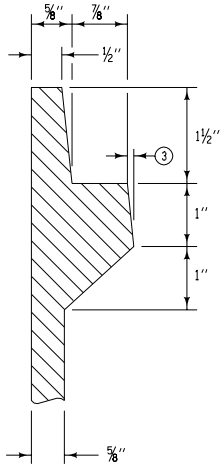

DETAIL 'A'

GENERAL NOTES:

Painting of casting is not required; however, if used, paint shall be evenly applied and neither sticky nor brittle when dry.

An identifiable trade name or mark may be imprinted on castings by the casting foundry.

1. Provide 9/16″ diameter holes at locations indicated.
2. Drill or Core 3/4″ holes.
3. DRAFT (Small Casting Taper) will be permitted.

Minimum Weight = 210 lbs.

See Standard Road Plan RA-67A for details of Type 10 Grate.

Iowa Department of Transportation
Highway Division

STANDARD ROAD PLAN **RA-67B**

REVISION: Revise General Notes.	REVISION NO.
	1
William J. Stein	REVISION DATE
APPROVED BY DESIGN METHODS ENGINEER	10-21-03

FRAME
FOR TYPE 10 GRATE