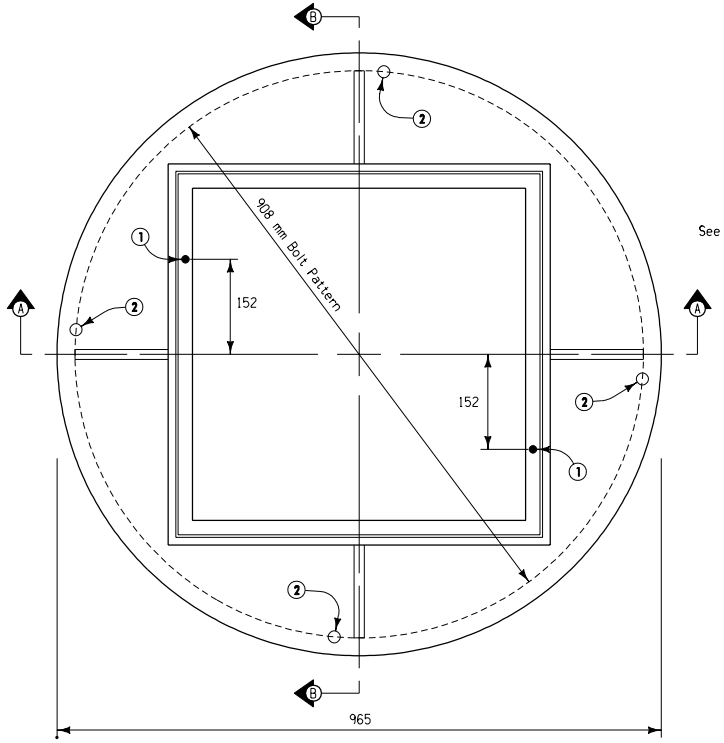

PLAN

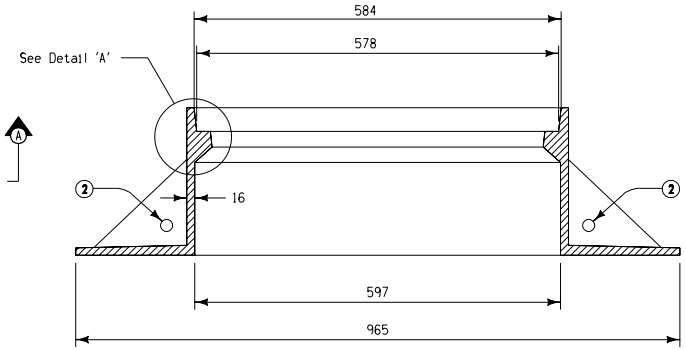

SECTION A-A

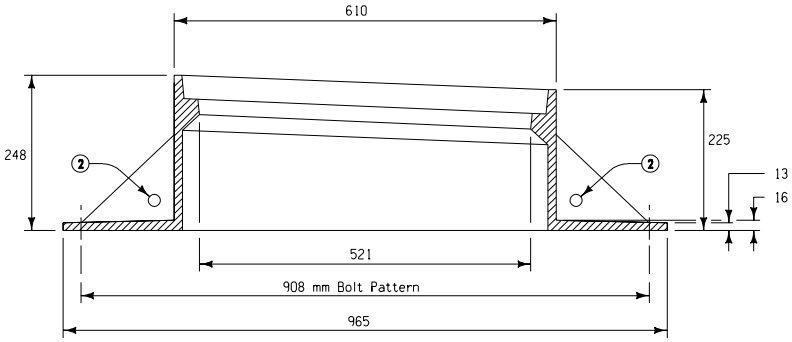

SECTION B-B

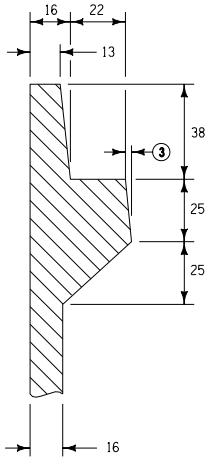

DETAIL 'A'

General Notes:

All castings shall be Class 30 or better gray iron castings complying with the Standard and Supplemental Specifications and shall be essentially as detailed hereon. The castings illustrated hereon are only typical. Alternate designs for similar situations may be submitted to the Engineer for approval. Minimum mass requirements will be met unless authorization is received for any such deviation. All castings subject to roadway traffic shall have machine ground bearing surface to prevent rattling, and match–marked before delivery. The use of grinding pads is allowed as long as all dimensional requirements are met.

Finish of castings shall be smooth and free of defects as per Standard and Supplemental Specifications. Painting of casting is not required; however, if used, paint shall be evenly applied and neither sticky nor brittle when dry.

All component parts of casting shall fit smoothly together without forcing and finished product shall have a completely satisfactory appearance.

An identifiable trade name or mark may be imprinted on castings by the casting foundry.

Unless specified otherwise as a part of detail plans, the cast iron frame described hereon shall not be paid for separately, but shall be included with and considered incidental to the bridge end drain or intake.

1. Provide 14 mm diameter holes at locations indicated.
2. Drill or Core 19 mm holes.
3. DRAFT (Small Casting Taper) will be permitted.

Minimum Mass = 95 kg

See Standard Road Plan RA-67A for details of Type 10 Grate.

All dimensions given in millimeters unless noted.

M

Iowa Department of Transportation
Project Development Division

METRIC VERSION

STANDARD ROAD PLAN **RA-67B**

REVISION: New

REVISION NO.
New
REVISION DATE
04-27-99

12-28-98
APPROVED BY DESIGN METHODS ENGINEER

FRAME
FOR TYPE 10 GRATE