TYPE E

Two-piece fixed casting

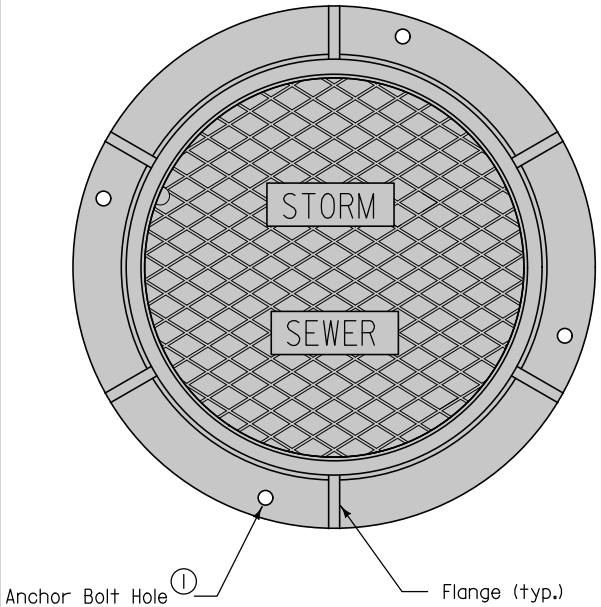

PLAN

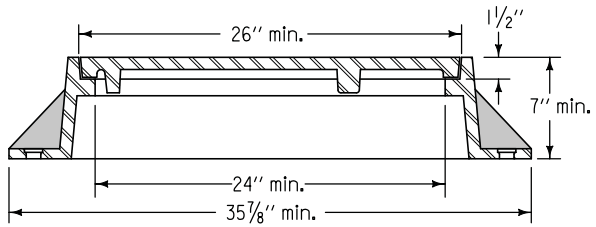

TYPICAL SECTION

TYPE F

Three-piece floating casting

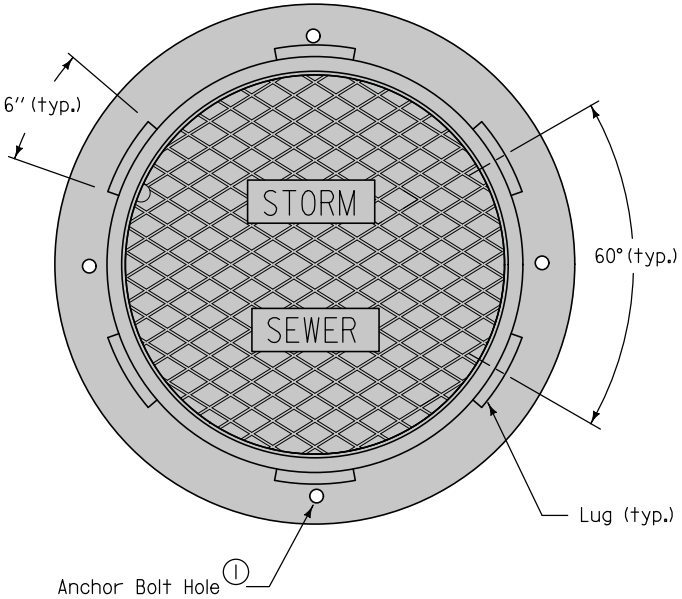

PLAN

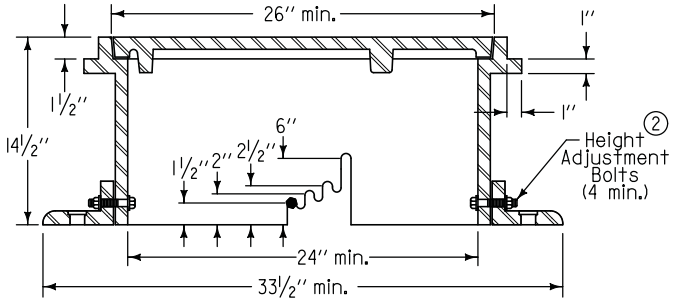

TYPICAL SECTION

Frame Notes:
Size and spacing of lugs and flanges may vary.

Cover Notes:
Roughness pattern and text styles may vary.
Minimum one concealed pickhole.

① When the contract documents require the frame to be attached to the structure, drill four ⅞″ diameter holes or slots, equally spaced around frame.

② Remove bolts upon completion of paving.

SUDAS	Iowa Department of Transportation	REVISION 1 10-20-09
FIGURE 6010.602	STANDARD ROAD PLAN	SW-602 SHEET 1 of 2

REVISIONS: Changed note 1 and added shading.

SUDAS DIRECTOR — DESIGN METHODS ENGINEER

CASTINGS FOR STORM SEWER MANHOLES

FIGURE 6010.602 SHEET 1 OF 2

TYPE G

Two-piece fixed casting

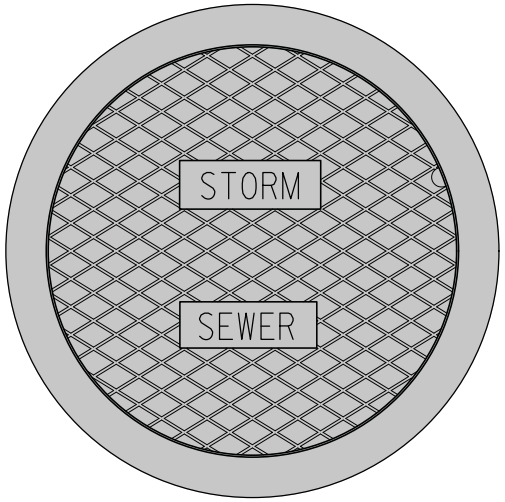

PLAN

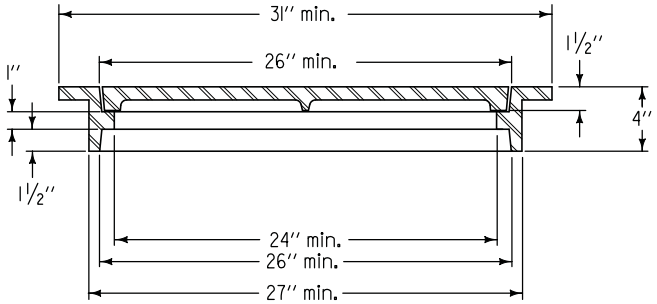

TYPICAL SECTION

SUDAS	Iowa Department of Transportation	REVISION 1 10-20-09
FIGURE 6010.602	STANDARD ROAD PLAN	SW-602 SHEET 2 of 2

REVISIONS: Changed note 1 and added shading.

SUDAS DIRECTOR — DESIGN METHODS ENGINEER

CASTINGS FOR STORM SEWER MANHOLES

FIGURE 6010.602 SHEET 2 OF 2