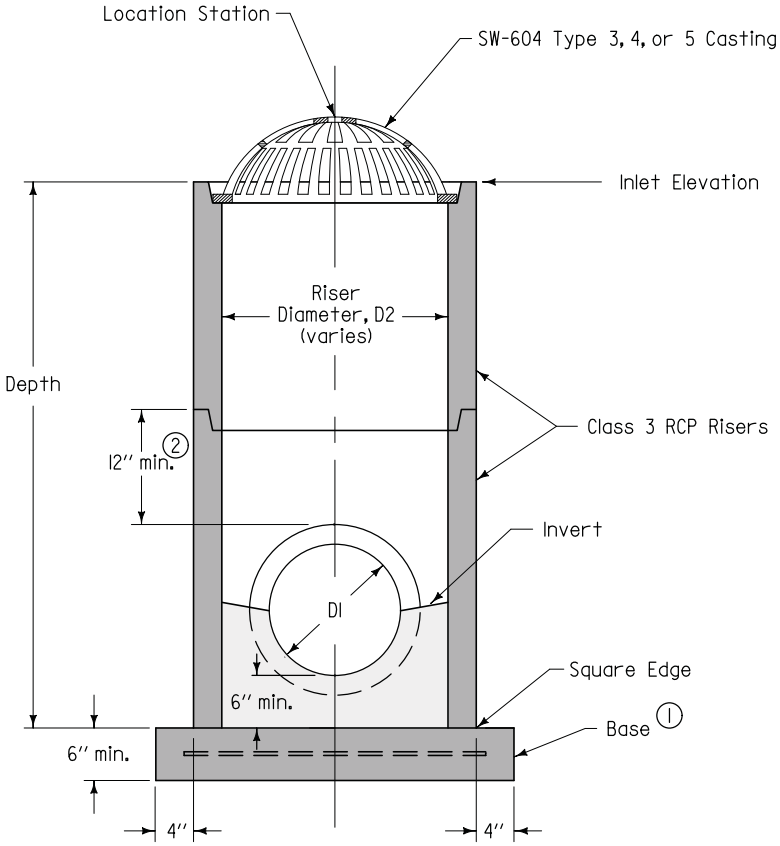

TYPICAL SECTION

CASE I

1 Precast (shown) or cast-in-place base:

- Precast: 6-inch thick concrete with #6 welded wire mesh on 4-inch centers (WWF 4" x 4"). Center mesh vertically within base.
- Cast-in-place: 8-inch thick non-reinforced concrete.

2 12-inch minimum riser height above all pipes.

INTAKE SIZE - CASE I	
Outlet Pipe Diameter, D1	Minimum Riser Diameter, D2
12"	18"
15"	24"
18"	24"
21"	30"
24"	30"
27"	36"

SUDAS | Iowa Department of Transportation

REVISION 1 10-20-09

FIGURE 6010.512 | STANDARD ROAD PLAN | SW-512 SHEET 1 of 2

REVISIONS: Changed circle notes 1 & 2 and shading. Added sheet 2.

SUDAS DIRECTOR | Deanna Maifeld DESIGN METHODS ENGINEER

CIRCULAR AREA INTAKE

FIGURE 6010.512 SHEET 1 OF 2

③ Minimum riser diameter is 18 inches.

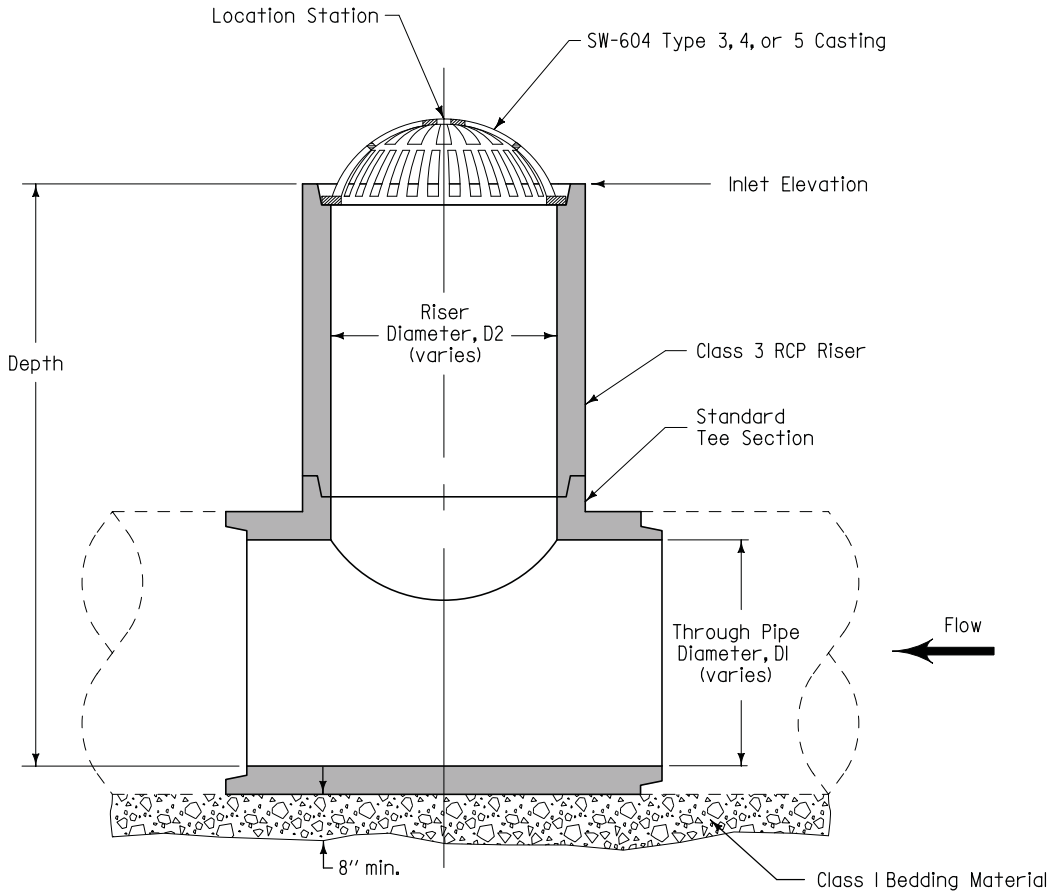

TYPICAL SECTION

CASE 2

INTAKE SIZE - CASE 2	
Through Pipe Diameter, DI	Maximum ③ Riser Diameter, D2
18"	18"
21"	18"
24"	24"
27"	24"
30"	30"
36" or more	36"

		REVISION	
SUDAS	Iowa Department of Transportation	1	10-20-09
FIGURE 6010.512	STANDARD ROAD PLAN	SW-512	
		SHEET 2 of 2	

REVISIONS: Changed circle notes 1 & 2 and shading.
Added sheet 2.

SUDAS DIRECTOR — DESIGN METHODS ENGINEER

CIRCULAR AREA INTAKE

FIGURE 6010.512 SHEET 2 OF 2