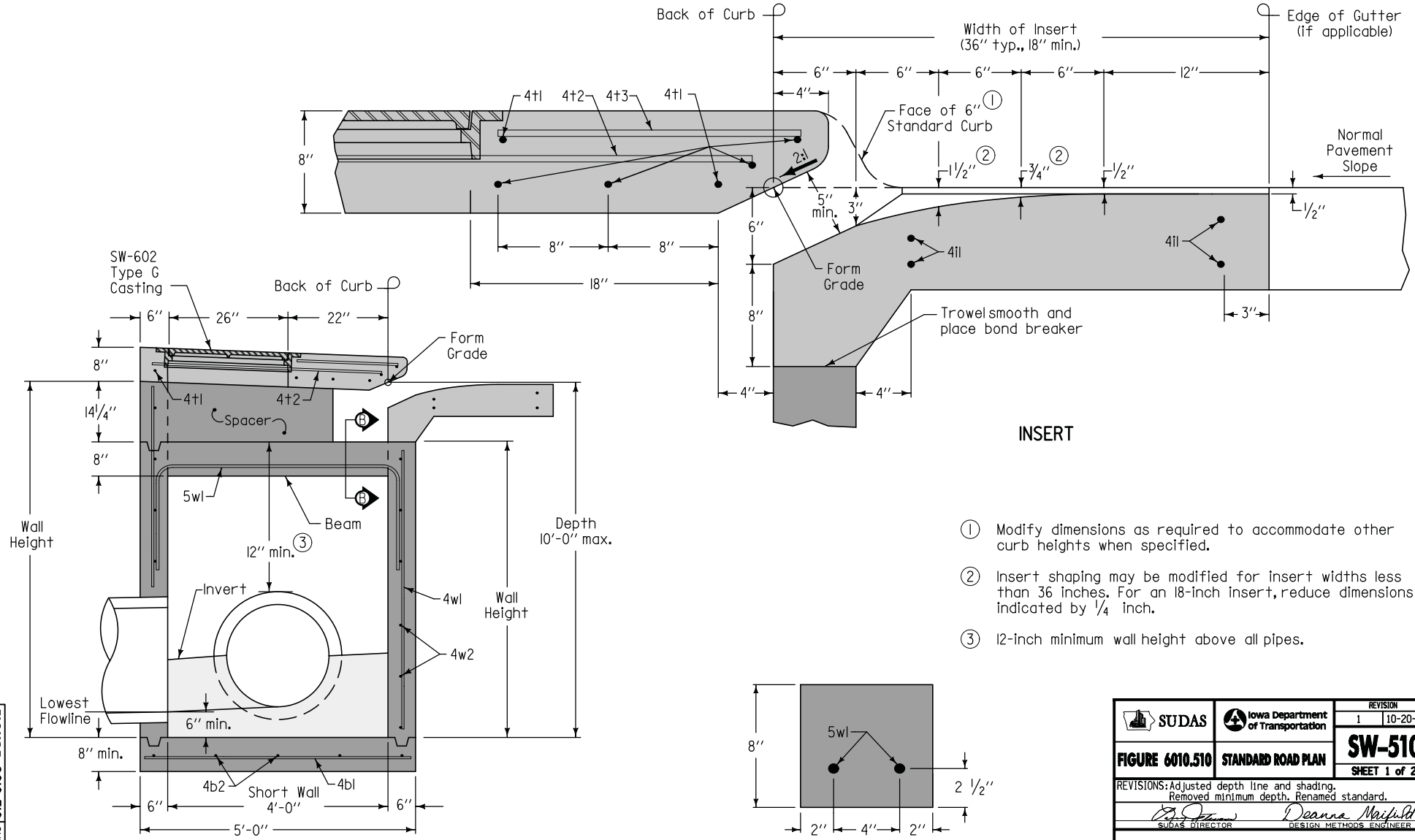

1. Modify dimensions as required to accommodate other curb heights when specified.
2. Insert shaping may be modified for insert widths less than 36 inches. For an 18-inch insert, reduce dimensions indicated by 1/4 inch.
3. 12-inch minimum wall height above all pipes.

SUDAS	Iowa Department of Transportation	REVISION 1 10-20-09
FIGURE 6010.510	STANDARD ROAD PLAN	SW-510 SHEET 1 of 2

REVISIONS: Adjusted depth line and shading. Removed minimum depth. Renamed standard.

SUDAS DIRECTOR — Deanna Maifeld, DESIGN METHODS ENGINEER

DOUBLE OPEN-THROAT CURB INTAKE, LARGE BOX

FIGURE 6010.510 SHEET 1 OF 2

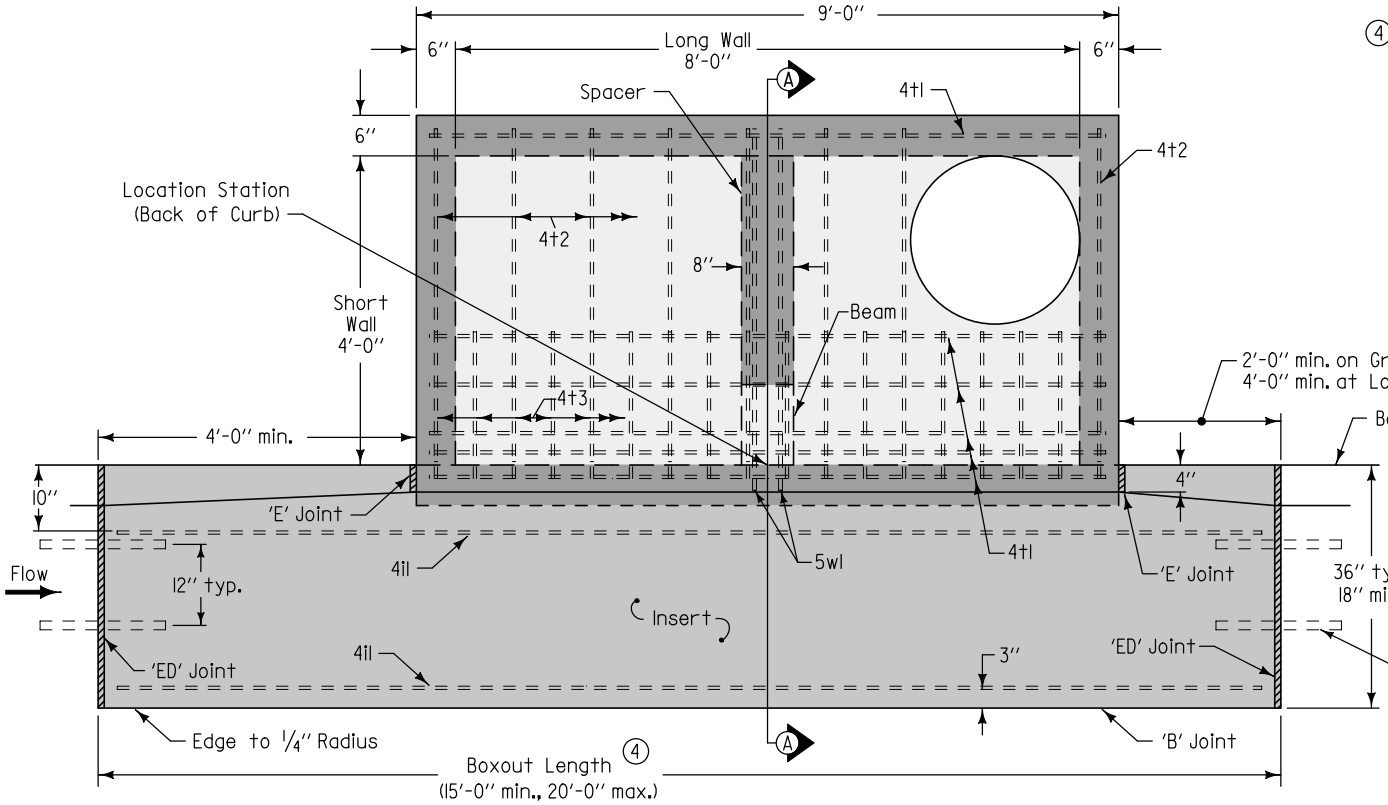

PLAN

4 Transverse joint spacing on new concrete pavement is controlled by the intake boxout. Adjust adjacent joint spacing as required to accommodate boxouts.

For retrofit intakes, match existing pavement joints. Stop any transverse pavement joints that do not conform to the minimum spacing requirements at the edge of the insert area.

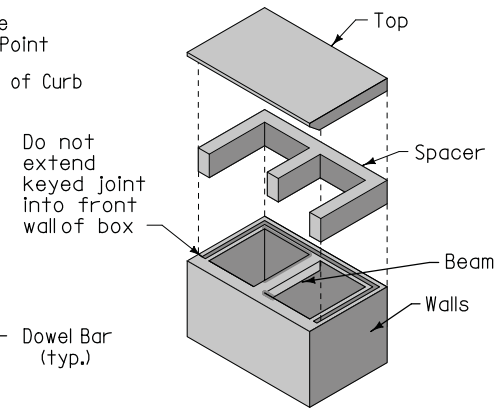

ISOMETRIC

REINFORCING BAR LIST						
Mark	Size	Location	Shape	Count	Length	Spacing
4b1	4	Base	——	9	4'-6"	12"
4b2	4	Base	——	6	8'-6"	11"
4i1	4	Insert	——	4	Boxout Length minus 8"	See Insert
4t1	4	Top	——	7	8'-6"	See Plan
4t2	4	Top	——	8	4'-4"	12"
4t3	4	Top	——	18	1'-10"	6"
4w1	4	Walls	——	24	Wall Height minus 4"	13"
4w2	4	Long Walls	——	Varies	4'-8"	12"
4w3	4	Short Walls	——	Varies	8'-8"	12"
5w1	5	Beam	⌐	2	8'-3"	4"

BENT BARS

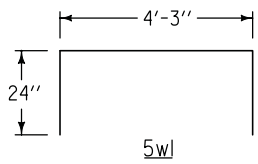

MAXIMUM PIPE DIAMETERS		
Pipe Location	Precast Structure	Cast-in-place Structure
Short Wall	30"	36"
Long Wall	60"	66"

SUDAS | Iowa Department of Transportation

REVISION 1 10-20-09

FIGURE 6010.510 | STANDARD ROAD PLAN | SW-510 | SHEET 2 of 2

REVISIONS: Adjusted depth line and shading. Removed minimum depth. Renamed standard.

SUDAS DIRECTOR | DESIGN METHODS ENGINEER

DOUBLE OPEN-THROAT CURB INTAKE, LARGE BOX

FIGURE 6010.510 SHEET 2 OF 2