1. Install four #4 diagonal bars at all pipe openings.
2. Cast-in-place base shown. If base is precast integral with walls, the footprint of the base is not required to extend beyond the outer edge of the walls.
3. 12 inch minimum wall height above all pipes.

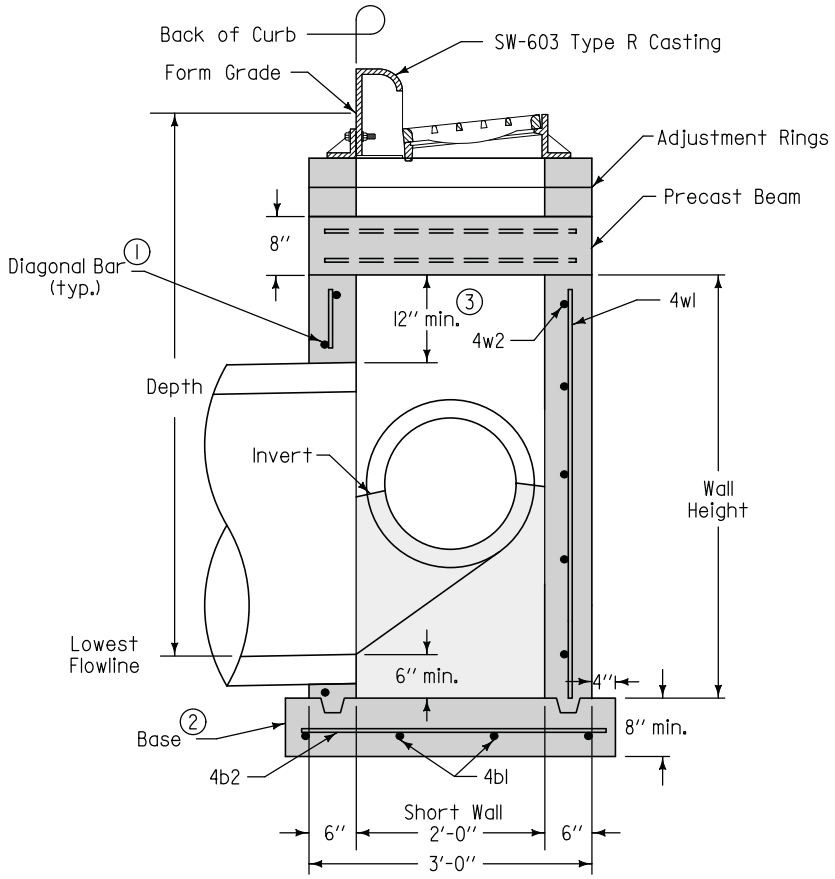

SECTION A-A

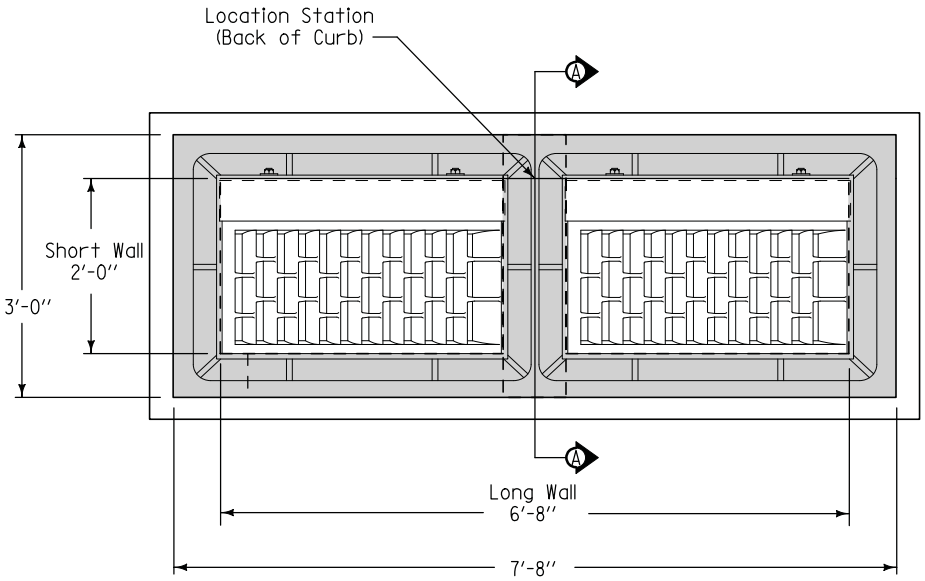

PLAN

SUDAS	Iowa Department of Transportation	REVISION NEW 04-21-09
FIGURE 6010.505	STANDARD ROAD PLAN	SW-505 SHEET 1 of 2

REVISIONS: New. Replaces SUDAS Figure 6030.5.

SUDAS DIRECTOR — DESIGN METHODS ENGINEER

DOUBLE GRATE INTAKE

FIGURE 6010.505 SHEET 1 OF 2

1. Install four #4 diagonal bars at all pipe openings.
2. Cast-in-place base shown. If base is precast integral with walls, the footprint of the base is not required to extend beyond the outer edge of the walls.
3. 12 inch minimum wall height above all pipes.

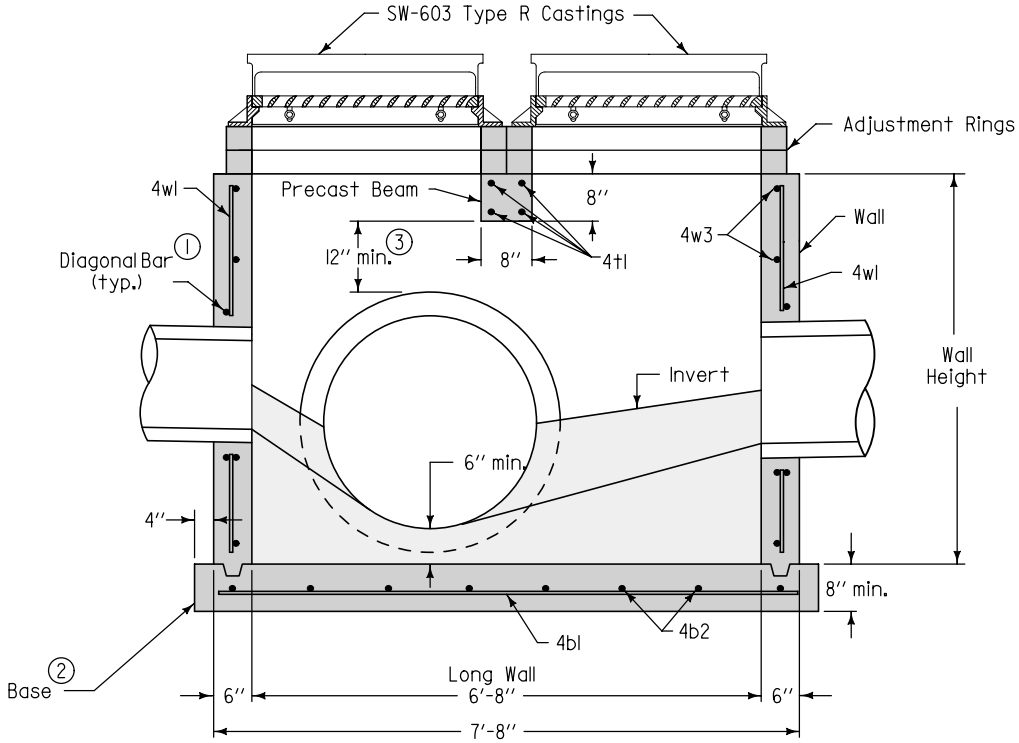

TYPICAL SECTION

REINFORCING BAR LIST						
Mark	Size	Location	Shape	Count	Length	Spacing
4t1	4	Beam	——	4	2'-8''	4''
4b1	4	Base	——	4	7'-10''	10''
4b2	4	Base	——	8	3'-2''	12''
4w1	4	Walls	——	20	Wall Height minus 4''	12''
4w2	4	Long Walls	——	Varies	7'-4''	12''
4w3	4	Short Walls	——	Varies	2'-8''	12''

MAXIMUM PIPE DIAMETERS		
Pipe Location	Precast Structure	Cast-in-place Structure
Short Wall	15''	18''
Long Wall	60''	66''

SUDAS | Iowa Department of Transportation

REVISION: NEW 04-21-09

FIGURE 6010.505 | STANDARD ROAD PLAN | SW-505 | SHEET 2 of 2

REVISIONS: New. Replaces SUDAS Figure 6030.5.

SUDAS DIRECTOR | Deanna Maifield, DESIGN METHODS ENGINEER

DOUBLE GRATE INTAKE

FIGURE 6010.505 SHEET 2 OF 2