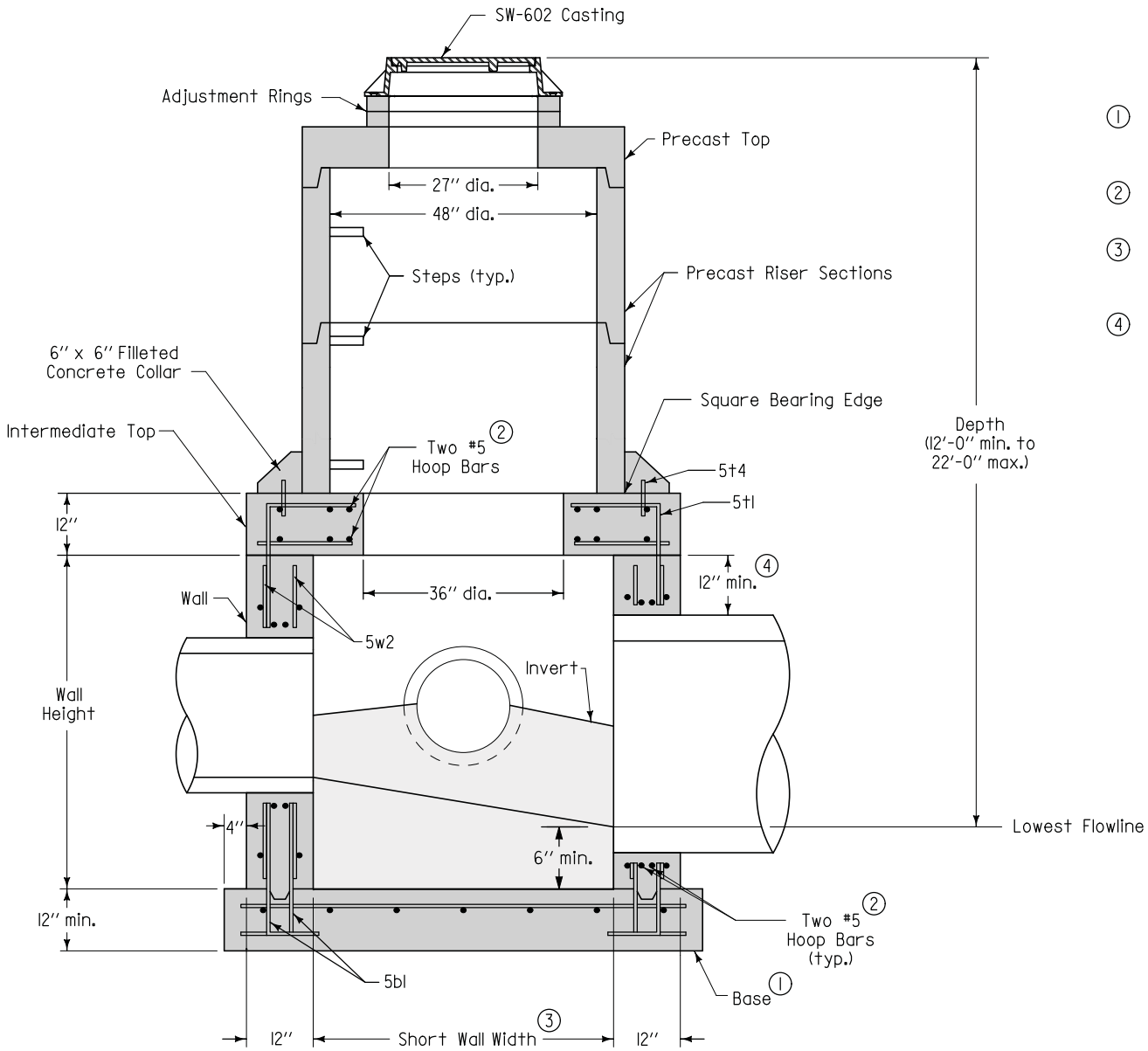

TYPICAL SECTION

Adjacent walls may have different widths based upon pipe configuration, but structure must be rectangular.

1. Cast-in-place base shown. If base is precast integral with walls, the footprint of the base is not required to extend beyond the outer edge of the walls.
2. Provide two #5 hoop bars at intermediate top opening and at all pipe openings.
3. Wall widths vary with pipe diameter and range from 4 feet minimum to 12 feet maximum. Provide 12 inches of wall width (minimum) each side of pipe opening.
4. 12 inch minimum wall height above all pipes.

SUDAS	Iowa Department of Transportation	REVISION NEW 04-21-09
FIGURE 6010.404	STANDARD ROAD PLAN	SW-404 SHEET 1 of 2

REVISIONS: New. Replaces SUDAS Type "M-D" Manhole.

SUDAS DIRECTOR — DESIGN METHODS ENGINEER

RECTANGULAR BASE/ CIRCULAR TOP STORM SEWER MANHOLE

FIGURE 6010.404 SHEET 1 OF 2

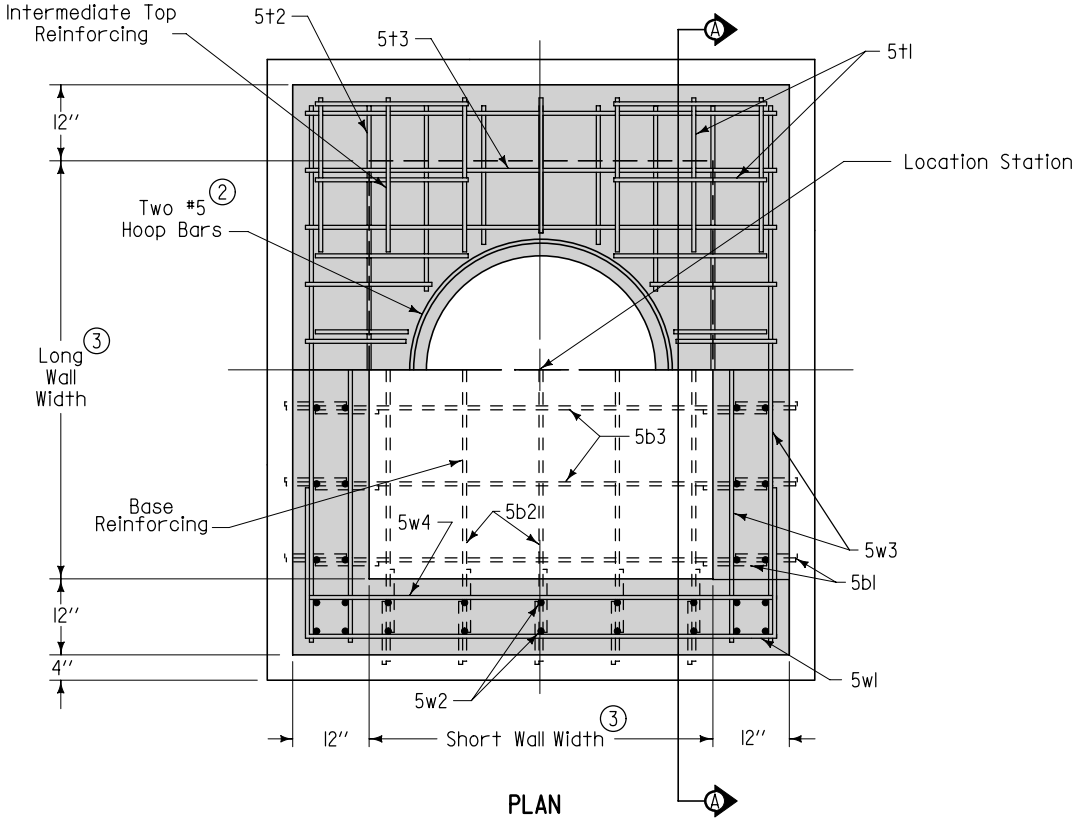

PLAN

(2) Provide two #5 hoop bars at intermediate top opening and at all pipe openings.

(3) Wall widths vary with pipe diameter and range from 4 feet minimum to 10 feet maximum. Provide 12 inches of wall width (minimum) each side of pipe opening.

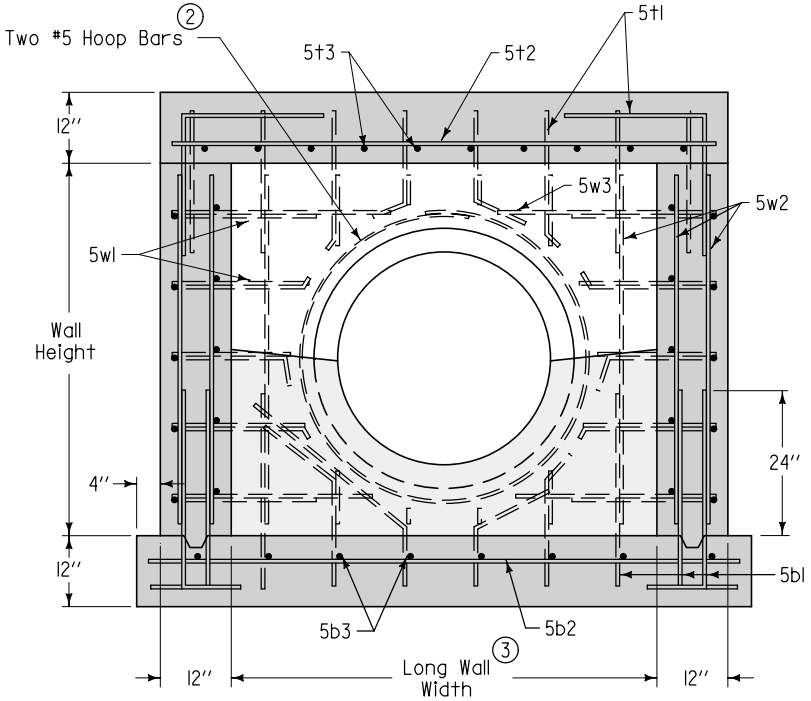

SECTION A-A

REINFORCING BAR LIST					
Mark	Size	Location	Shape	Length	Spacing
5t1	5	Top	L	48''	12''
5t2	5	Top	——	Long Wall plus 20''	9''
5t3	5	Top	——	Short Wall plus 20''	9''
5t4	5	Top	——	8''	12''
5b1	5	Base	L	43''	12''
5b2	5	Base	——	Long Wall plus 26''	12''
5b3	5	Base	——	Short Wall plus 26''	12''
5w1	5	Wall	⊓	Short Wall plus 68''	12''
5w2	5	Wall	——	Wall Height minus 4''	12''
5w3	5	Wall	——	Long Wall plus 20''	12''
5w4	5	Wall	——	Short Wall plus 20''	12''

BENT BARS

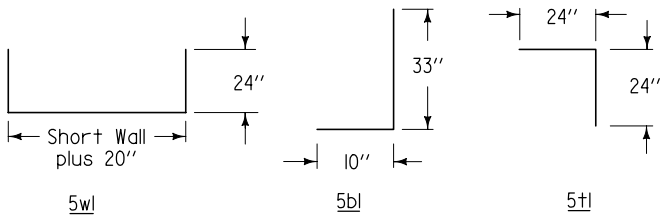

SUDAS	Iowa Department of Transportation	REVISION NEW 04-21-09
FIGURE 6010.404	STANDARD ROAD PLAN	SW-404 SHEET 2 of 2

REVISIONS: New. Replaces SUDAS Type "M-D" Manhole

SUDAS DIRECTOR — DESIGN METHODS ENGINEER

RECTANGULAR BASE/ CIRCULAR TOP STORM SEWER MANHOLE

FIGURE 6010.404 SHEET 2 OF 2