Adjacent walls may have different widths based upon pipe configuration, but structure must be rectangular.

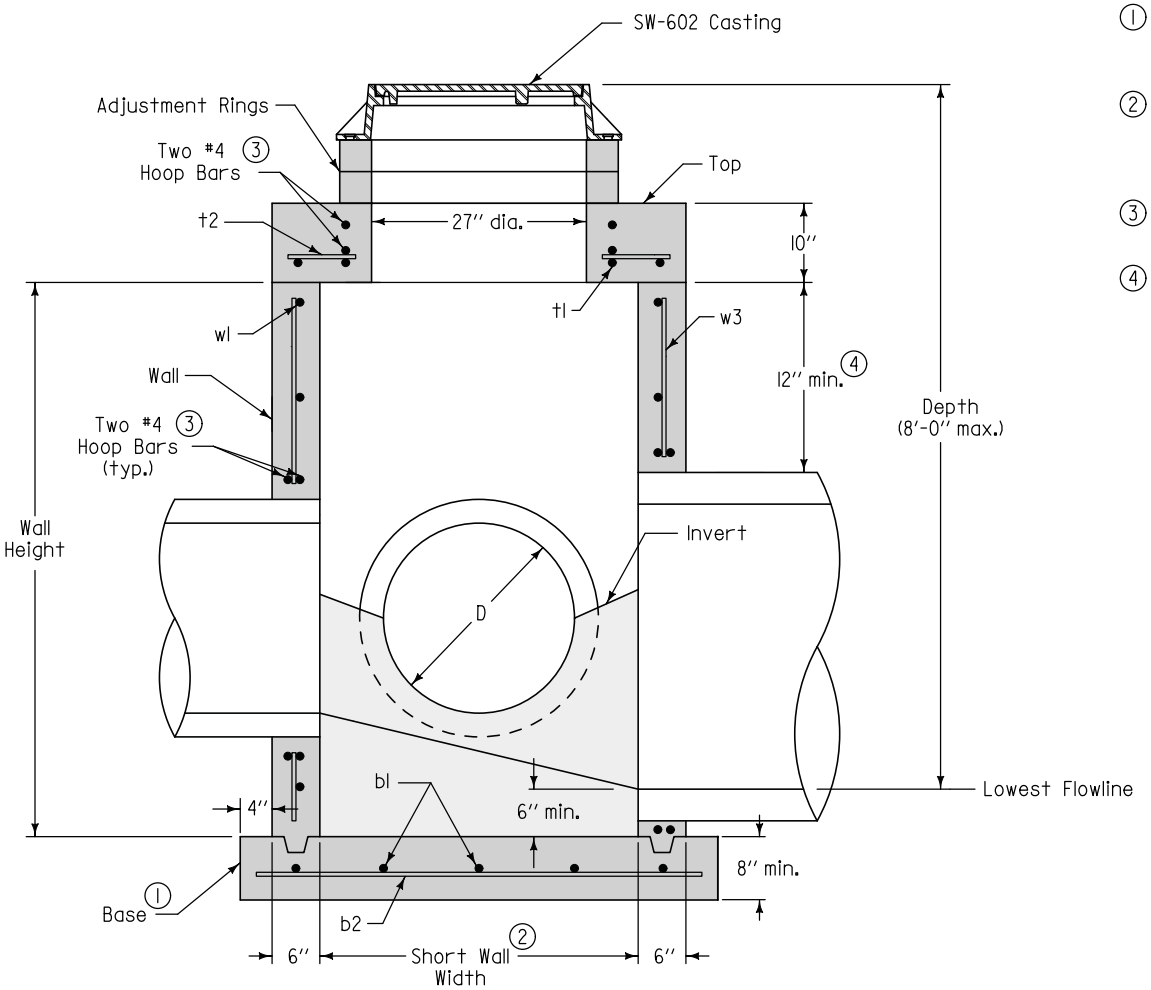

TYPICAL SECTION

① Cast-in-place base shown. If base is precast integral with walls, the footprint of the base is not required to extend beyond the outer edge of the walls.

② Wall widths vary with pipe diameter and range from 40 inches minimum to 77 inches maximum. Provide 6 inches of wall width (minimum) each side of pipe opening.

③ Provide two #4 hoop bars at top opening and at all pipe openings.

④ 12 inch minimum wall height above all pipes.

SUDAS	Iowa Department of Transportation	REVISION: NEW 04-21-09
FIGURE 6010.402	STANDARD ROAD PLAN	SW-402
		SHEET 1 of 2

REVISIONS: New. Replaces SUDAS Type "M-B" Manhole. Will replace RA-49.

SUDAS DIRECTOR — DESIGN METHODS ENGINEER

RECTANGULAR STORM SEWER MANHOLE

FIGURE 6010.402 SHEET 1 OF 2

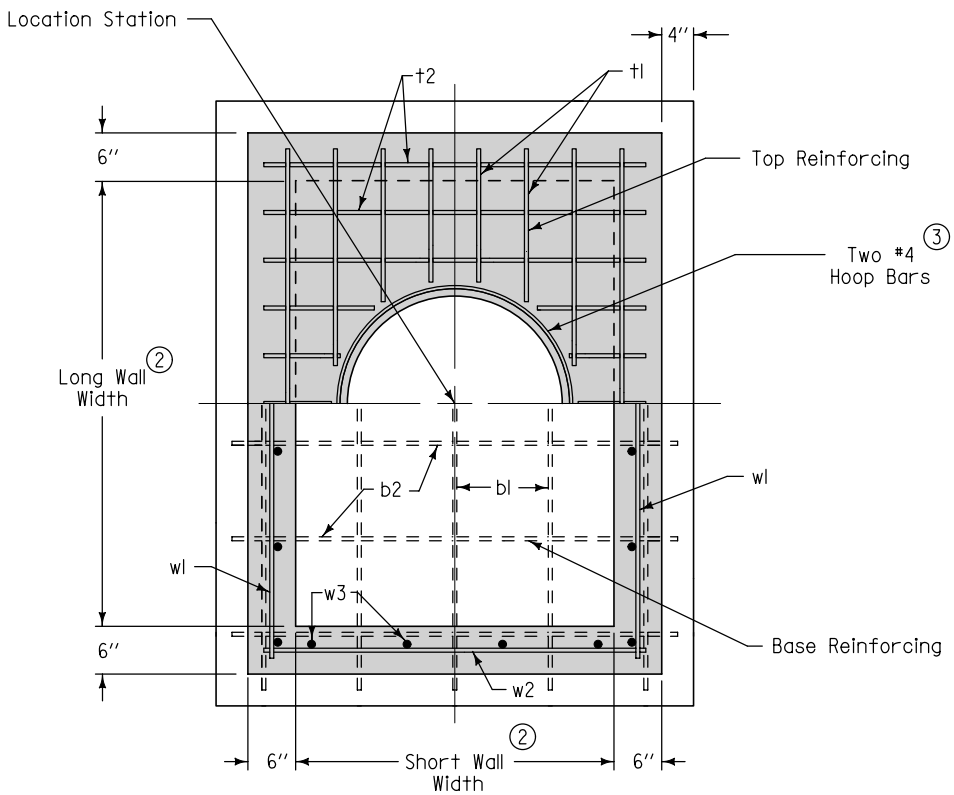

PLAN

2 Wall widths vary with pipe diameter and range from 40 inches minimum to 77 inches maximum. Provide 6 inches of wall width (minimum) each side of pipe opening.

3 Provide two #4 hoop bars at top opening and at all pipe openings.

REINFORCING BAR LIST					
Mark	Size	Location	Shape	Length	Spacing
t1	See Table	Top	——	Long Wall plus 8''	6''
t2	See Table	Top	——	Short Wall plus 8''	6''
b1	See Table	Base	——	Long Wall plus 14''	12''
b2	See Table	Base	——	Short Wall plus 14''	12''
w1	See Table	Walls	——	Long Wall plus 8''	12''
w2	See Table	Walls	——	Short Wall plus 8''	12''
w3	See Table	Walls	——	Wall Height minus 4''	12''

Diameter of Largest Pipe, D	Minimum Bar Size
48'' or 54''	6
33'' to 42''	5
30'' or smaller	4

SUDAS | Iowa Department of Transportation

REVISION: NEW 04-21-09

FIGURE 6010.402 | STANDARD ROAD PLAN | SW-402 | SHEET 2 of 2

REVISIONS: New. Replaces SUDAS Type "M-B" Manhole. Will replace RA-49.

SUDAS DIRECTOR | DESIGN METHODS ENGINEER

RECTANGULAR STORM SEWER MANHOLE

FIGURE 6010.402 SHEET 2 OF 2