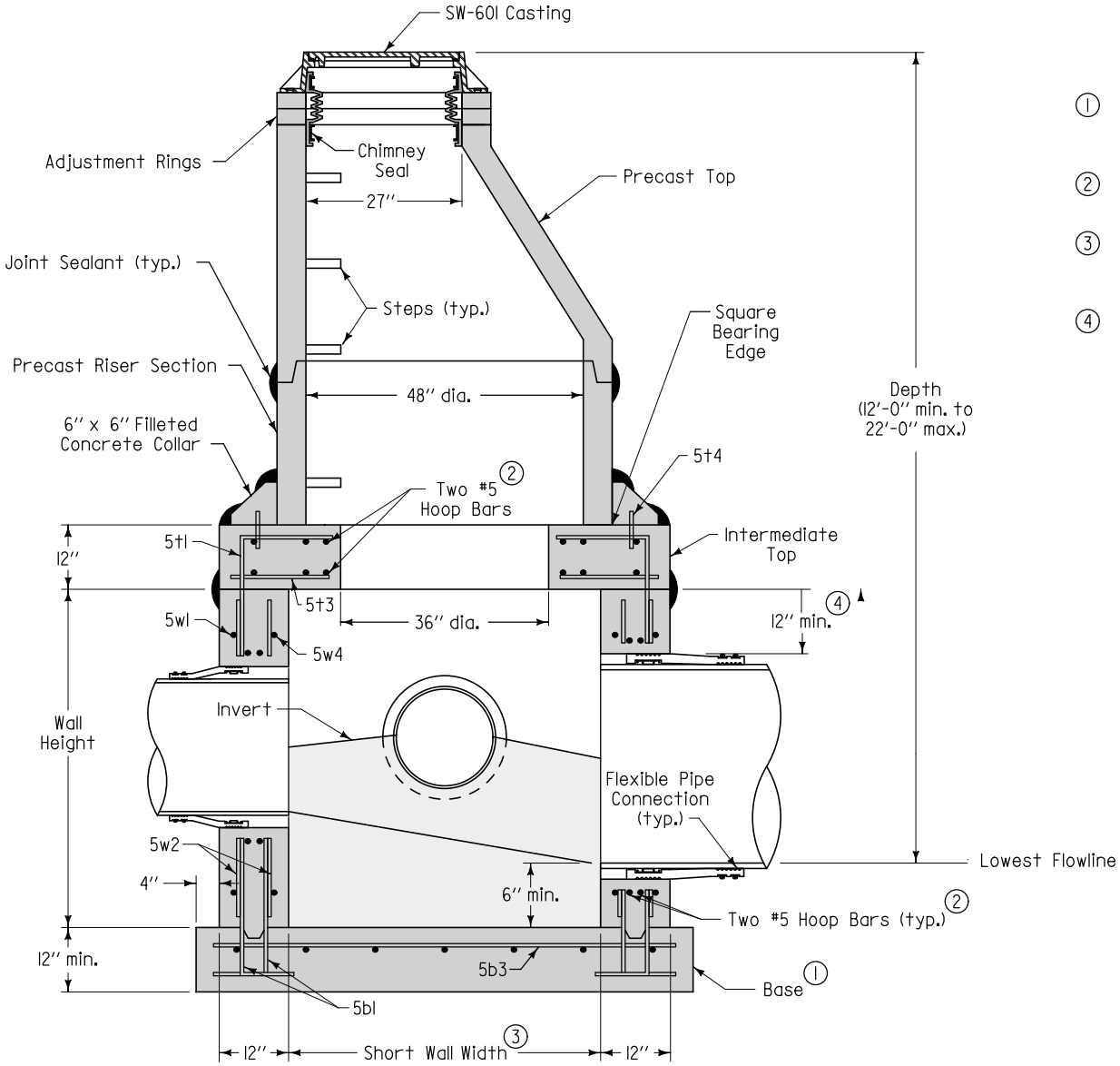

TYPICAL SECTION

Adjacent walls may have different widths based upon pipe configuration, but structure must be rectangular.

① Cast-in-place base shown. If base is precast integral with walls, the footprint of the base is not required to extend beyond the outer edge of the walls.

② Provide two #5 hoop bars at intermediate top opening and at all pipe openings.

③ Wall widths vary with pipe diameter and range from 4 feet minimum to 12 feet maximum. Provide 12 inches of wall width (minimum) each side of pipe opening.

④ 12 inch minimum wall height above all pipe openings.

SUDAS	Iowa Department of Transportation	REVISION NEW 04-21-09
FIGURE 6010.304	STANDARD ROAD PLAN	SW-304 SHEET 1 of 2

REVISIONS: New. Replaces SUDAS Type "F" Manhole

SUDAS DIRECTOR — DESIGN METHODS ENGINEER

RECTANGULAR BASE/ CIRCULAR TOP SANITARY SEWER MANHOLE

FIGURE 6010.304 SHEET 1 OF 2

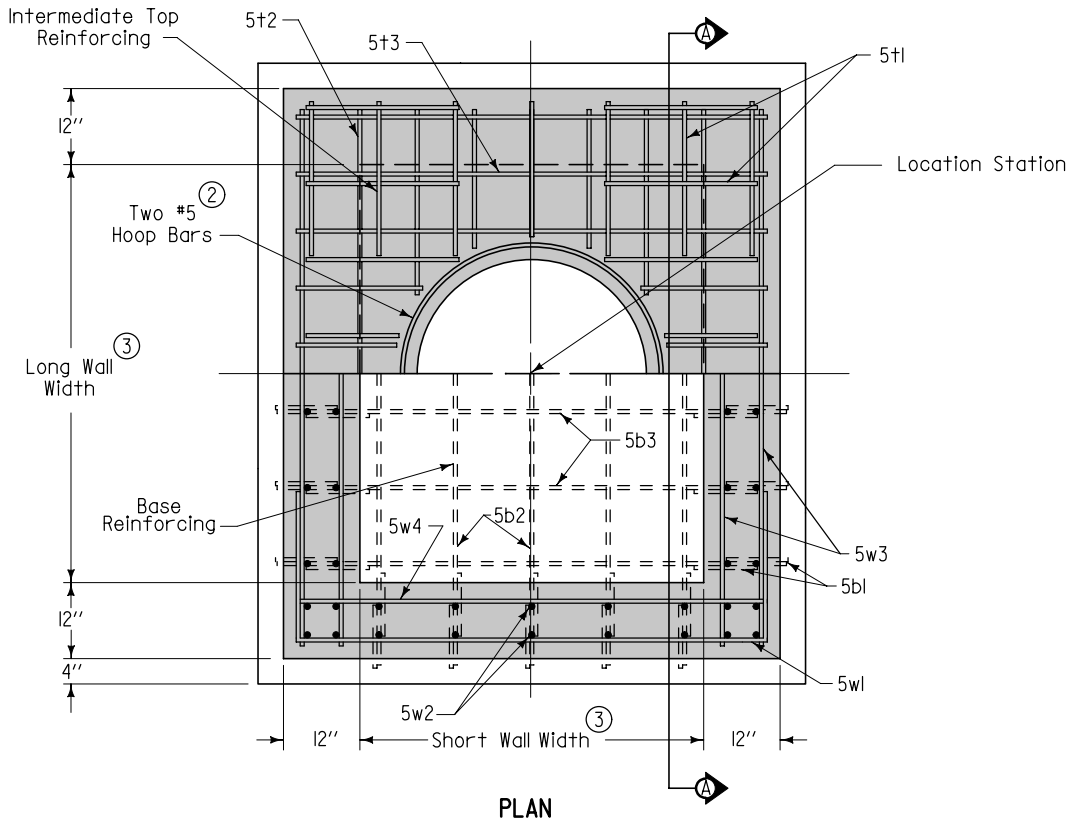

PLAN

② Provide two #5 hoop bars at intermediate top opening and at all pipe openings.

③ Wall widths vary with pipe diameter and range from 4 feet minimum to 10 feet maximum. Provide 12 inches of wall opening (minimum) each side of pipe opening.

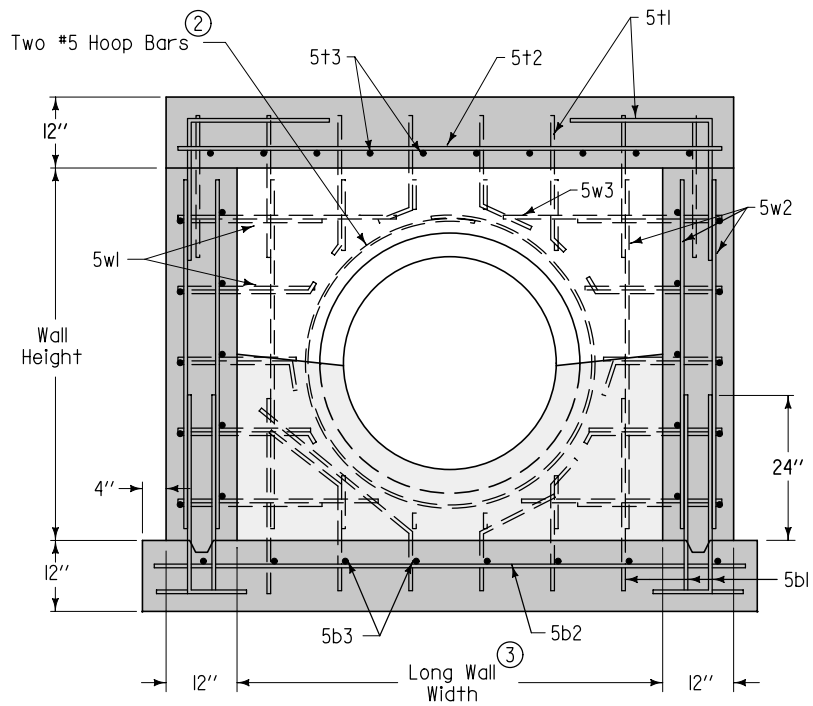

SECTION A-A

REINFORCING BAR LIST					
Mark	Size	Location	Shape	Length	Spacing
5t1	5	Top	L	48''	12''
5t2	5	Top	——	Long Wall plus 20''	9''
5t3	5	Top	——	Short Wall plus 20''	9''
5t4	5	Top	——	8''	12''
5b1	5	Base	L	43''	12''
5b2	5	Base	——	Long Wall plus 26''	12''
5b3	5	Base	——	Short Wall plus 26''	12''
5w1	5	Wall	⊓	Short Wall plus 68''	12''
5w2	5	Wall	——	Wall Height minus 4''	12''
5w3	5	Wall	——	Long Wall plus 20''	12''
5w4	5	Wall	——	Short Wall plus 20''	12''

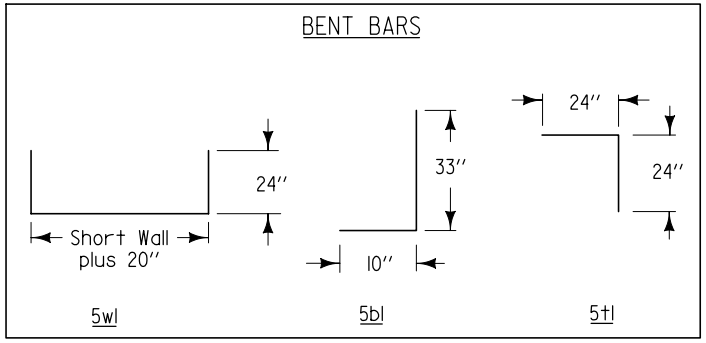

SUDAS	Iowa Department of Transportation	REVISION NEW 04-21-09
FIGURE 6010.304	STANDARD ROAD PLAN	SW-304 SHEET 2 of 2

REVISIONS: New. Replaces SUDAS Type "F" Manhole

SUDAS DIRECTOR — DESIGN METHODS ENGINEER

RECTANGULAR BASE/ CIRCULAR TOP SANITARY SEWER MANHOLE

FIGURE 6010.304 SHEET 2 OF 2