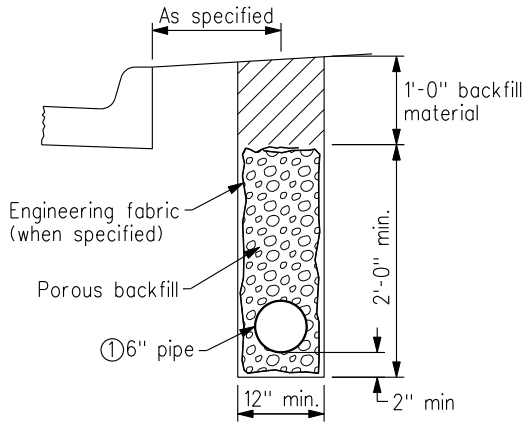

CASE A
TYPE 1

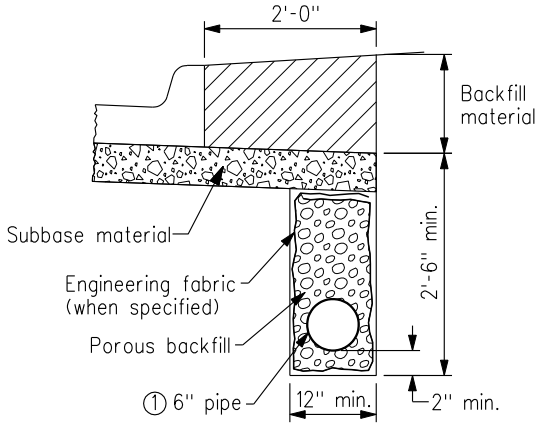

CASE B
TYPE 1

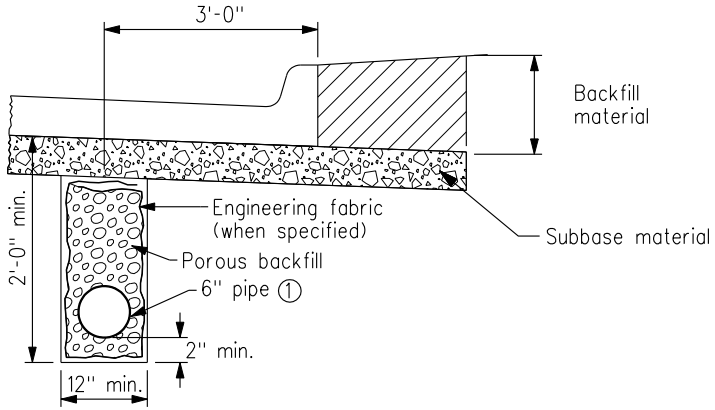

CASE C
TYPE 1

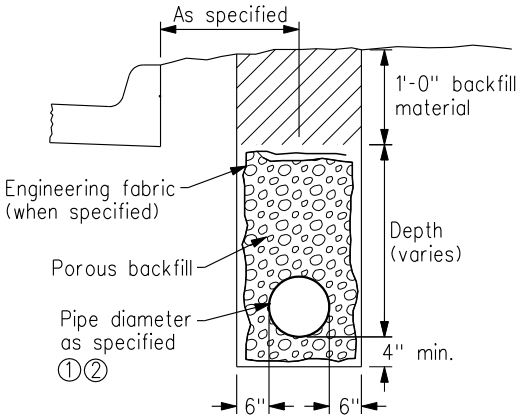

CASE D
TYPE 2

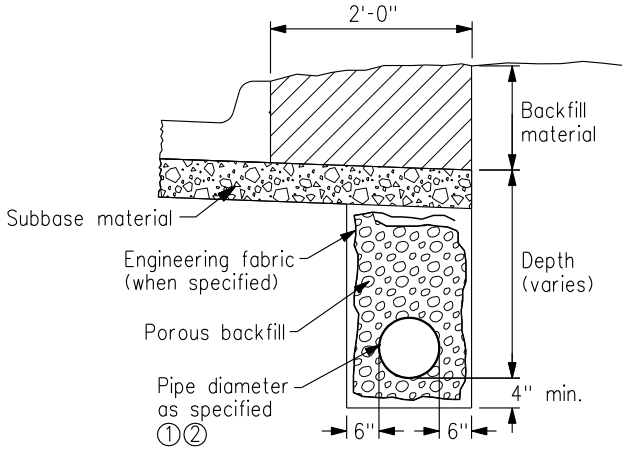

CASE E
TYPE 2

Note: Type 1 installation is for longitudinal subdrain only. Type 2 installation is for combination subdrain/footing drain collectors.

① Place perforations down for all installations.

② When concrete pipe is specified, wrap pipe joints with engineering fabric. Do not apply joint sealant. Comply with Figure 4020.211.

SUDAS

REVISION	
NEW	10/21/08

FIGURE 4040.231

SHEET 1 OF 1

SUBDRAINS

FIGURE 4040.231 SHEET 1 OF 1