(1) Zone of conflict is from 6 inches below the bottom of the sewer pipe to 2 inches above the top of pipe.

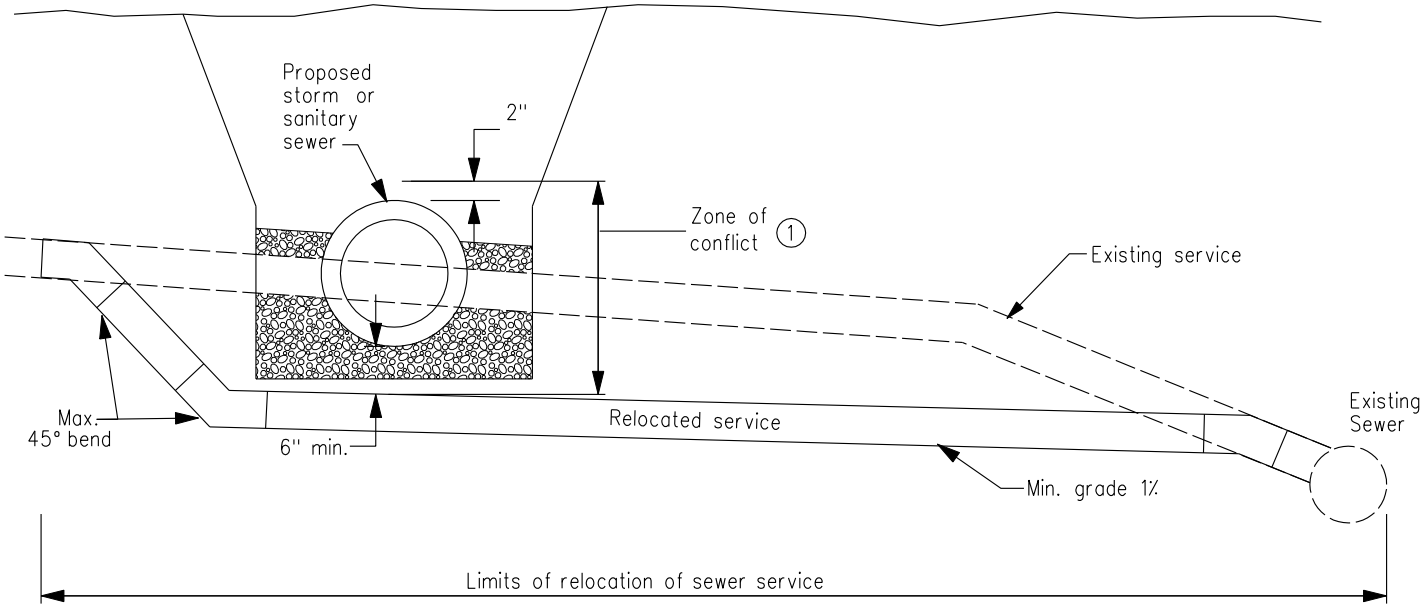

	Service Status	Contractor's Responsibility	Compensation
1.	Service located outside zone of conflict.	Provide protection. If damaged, repair in compliance with plumbing code.	Incidental to other work.
2.	Service located in zone of conflict.	Relocate service according to Section 4010, 3.07.	Bid item: Relocate sanitary sewer service.
3.	Service located in zone of conflict, but elevations do not allow simple relocation as detailed above. Special design required.	Relocate service as directed by the Engineer.	Change order.

SUDAS

REVISION

NEW	10/21/08

FIGURE 4010.901

SHEET 1 OF 1

RELOCATE SANITARY SEWER SERVICE IN CONFLICT WITH NEW SEWER

FIGURE 4010.901 SHEET 1 OF 1