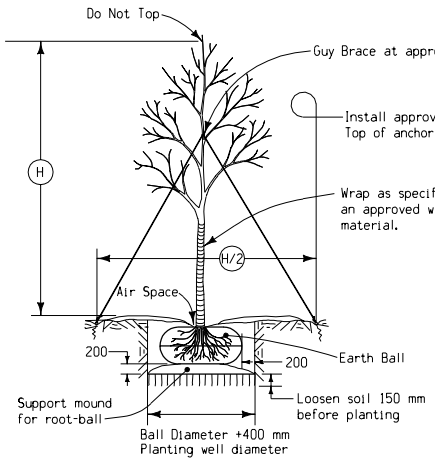

TYPICAL LARGE TREE

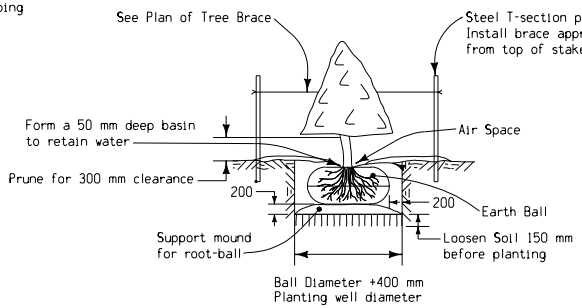

TYPICAL SMALL TREE

TYPICAL DETAILS OF BALLED AND BURLAPPED PLANTING

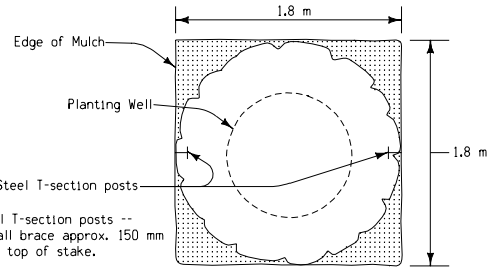

TYPICAL PLAN
FOR INSTALLING MULCH

GENERAL NOTES:

Tree and shrub planting shall be done in conformance with current Standard and Supplemental Specifications and as detailed hereon. Refer to detail project plans for additional information regarding planting location and layout.

All planting details for which no specific requirement is indicated shall be done at the direction of the Engineer.

Price bid for contract items shall be full compensation for accomplishing all planting as indicated hereon and as described on project plan.

Entire area to be mulched shall be tilled with a rotary tiller or other method approved by the Engineer.

All areas to be mulched shall be raked smooth and shall be free of vegetation, debris, clods and rocks. Form a 50 millimeter deep basin around plants to retain water. Plants shall be planted at the same depth as they were in the nursery.

Mulch material and depth shall be as designated on the plans. Mulch shall be pulled back 12 to 25 millimeters from the plants to allow air circulation and shall be of uniform depth to reflect the 50 millimeter basin.

Pruning shall consist of removing dead, broken, and irregular branches only. Do not prune the tops of plants unless it is to remove dead or broken material.

Steel posts for staking shall conform to Article 4154.09 of the Standard Specifications. Posts for trees 1.5 meters in height and less shall be 1.5 meters in length. Posts for trees taller than 1.5 meters shall be 2.1 meters in length.

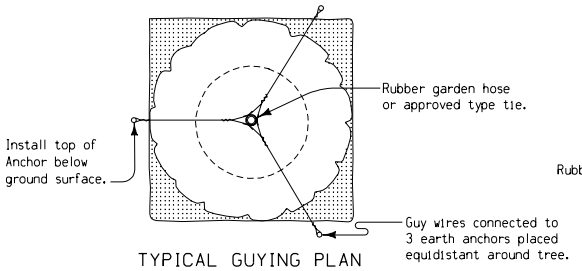

TYPICAL GUYING PLAN

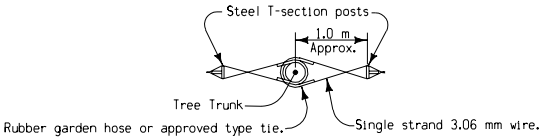

TYPICAL PLAN OF TREE BRACE

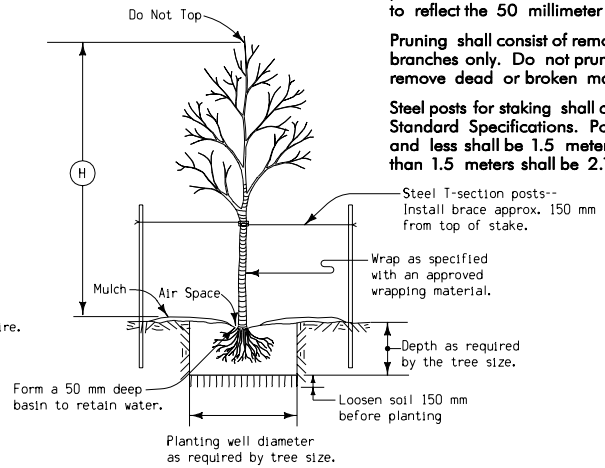

TYPICAL DETAILS OF BARE ROOT PLANTING

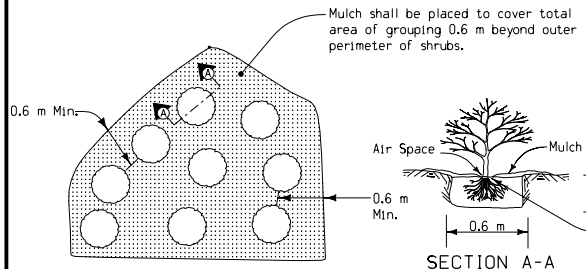

TYPICAL PLAN

SECTION A-A
(INDIVIDUAL SHRUB IN GROUP PLANTINGS)

DETAILS OF PLANTING OF IRREGULAR SHRUB GROUPS

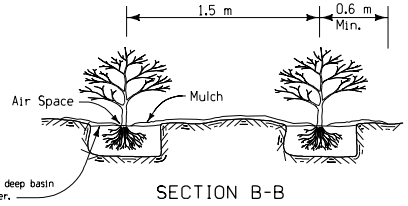

SECTION B-B

DETAILS OF LIVING SNOW FENCE

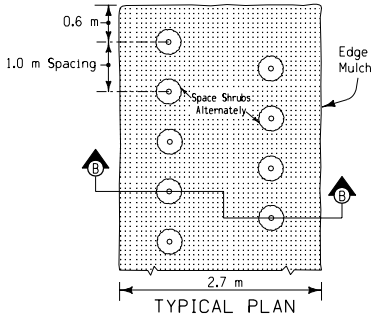

TYPICAL PLAN

All dimensions given in millimeters unless noted.

M

Iowa Department of Transportation
Project Development Division

METRIC VERSION

STANDARD ROAD PLAN | **RC-6C**

REVISION: Redrawn in CADD.

REVISION NO.	REVISION DATE
5	04-27-99

APPROVED BY DESIGN METHODS ENGINEER 12-28-98

DETAILS FOR PLANTING
TREES AND SHRUBS