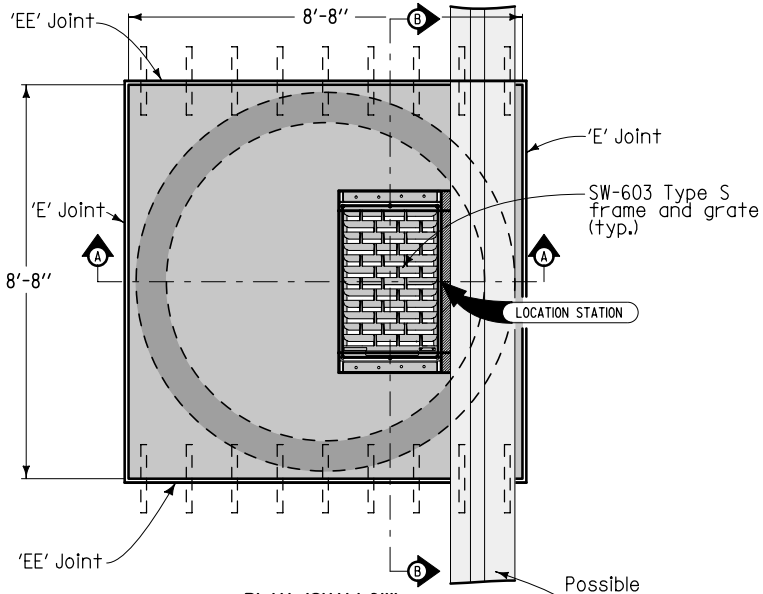

PLAN (SHALLOW)

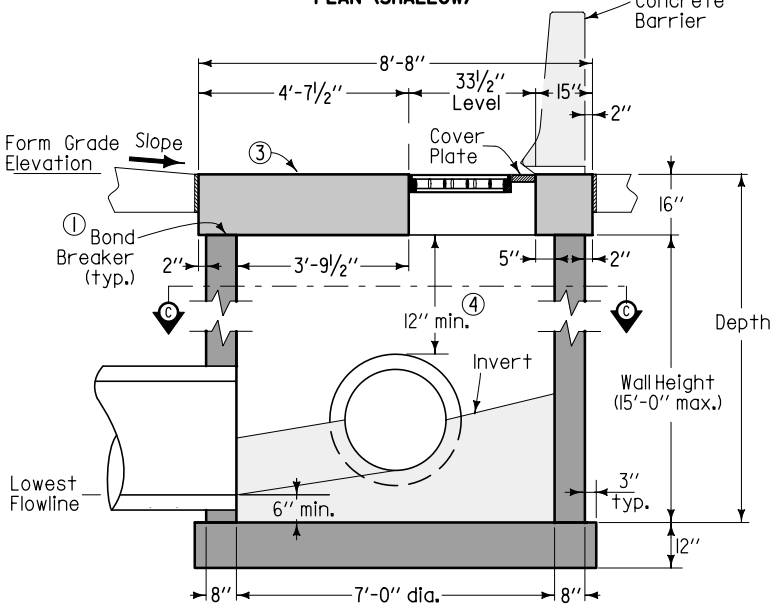

SECTION A-A (SHALLOW)

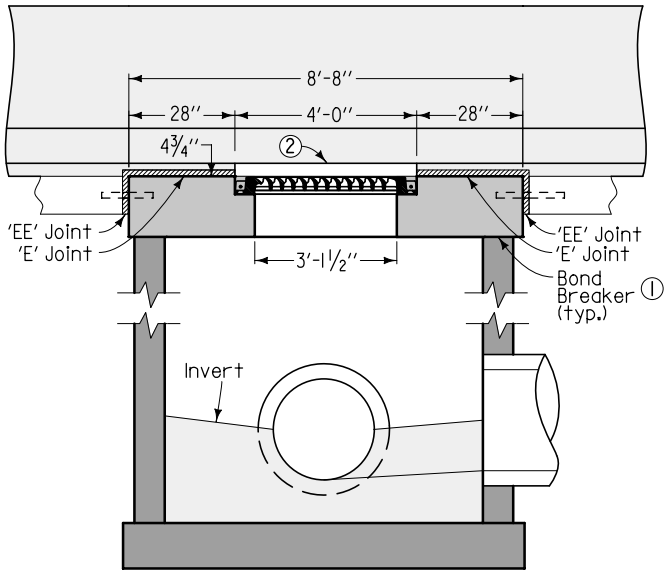

SECTION B-B (SHALLOW)

All plate and edge armor steel to be ASTM A 36, galvanized after fabrication.

Remove cover plate before constructing concrete barrier.

Cast frames into intake top so tops of grates are ¼" below Form Grade Elevation. Bolt intake frames together on both sides with four ½" x 4" bolts.

For joint details, refer to RH-50, RH-51 and RH-52.

① Trowel smooth and place two layers of 30-pound roofing felt to prevent bond.

② Leave 3-inch opening through barrier over the intake.

③ Vary slope of top to match elevation of adjacent pavement.

④ 12-inch minimum above all pipes.

Shallow circular intake H = 3'-0" to 15'-0" 7' barrel diameter

Deep circular option: H = 15'-0" to 28'-0" 4' and 7' barrel diameters

Possible Contract Item:
Barrier Intake, SW-548

Possible Tabulation:
104-5B

Iowa Department of Transportation

STANDARD ROAD PLAN

REVISION	
NEW	10-20-09

SW-548

SHEET 1 of 6

REVISIONS: New. Replaces RA-48B.

Deanna Maifield
APPROVED BY DESIGN METHODS ENGINEER

SINGLE-GRATE BARRIER INTAKE, CIRCULAR

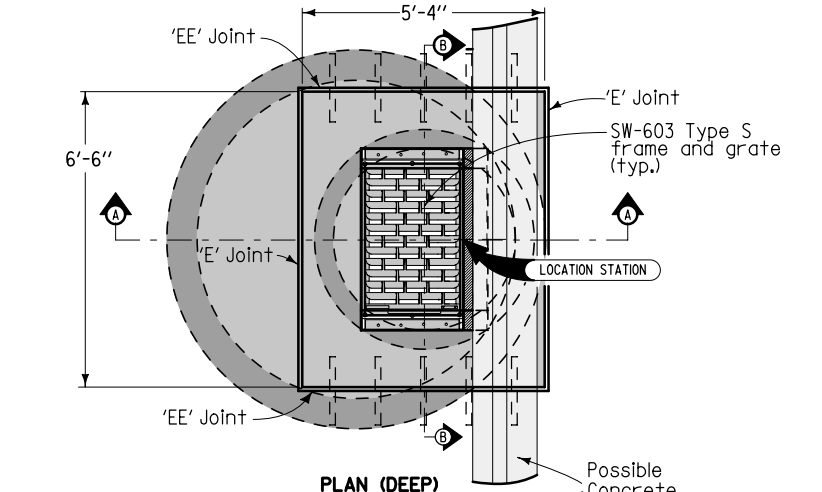

PLAN (DEEP)

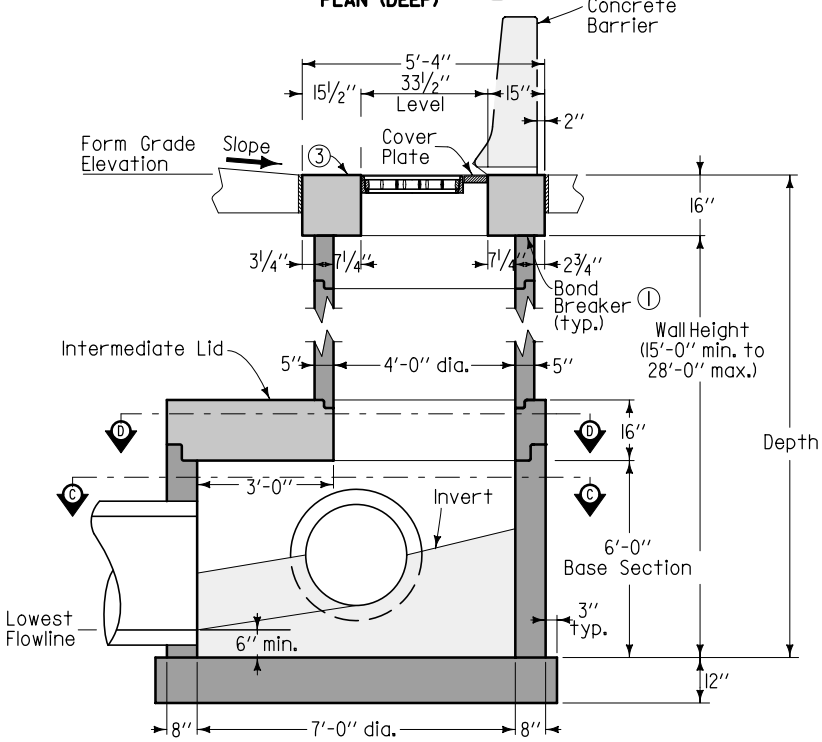

SECTION A-A (DEEP)

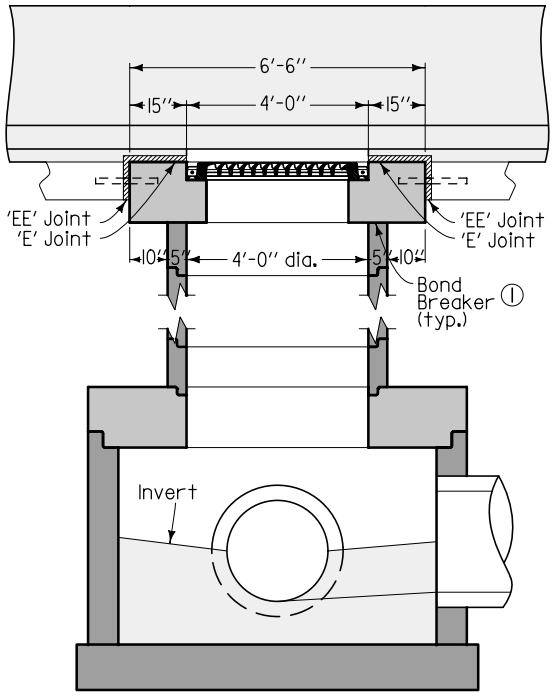

SECTION B-B (DEEP)

1. Trowel smooth and place two layers of 30-pound roofing felt to prevent bond.
2. Leave 3-inch opening through barrier over the intake.
3. Vary slope of top to match elevation of adjacent pavement.
4. 12-inch minimum above all pipes.

Iowa Department of Transportation

STANDARD ROAD PLAN

REVISION	
NEW	10-20-09

SW-548

SHEET 2 of 6

REVISIONS: New. Replaces RA-48B.

Deanna Maifield

APPROVED BY DESIGN METHODS ENGINEER

SINGLE-GRATE BARRIER INTAKE, CIRCULAR

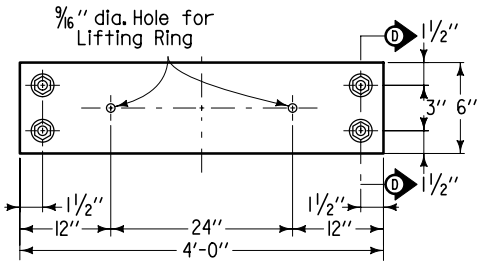

PLAN

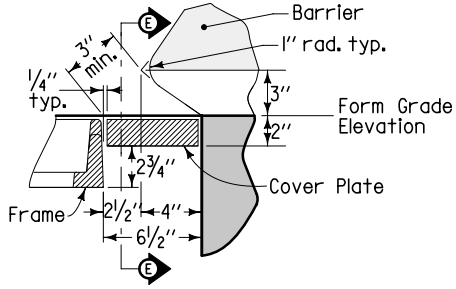

PART SECTION A-A

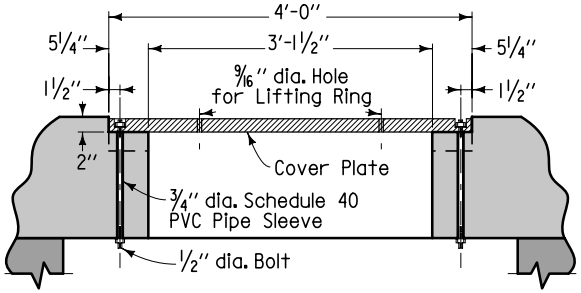

SECTION E-E

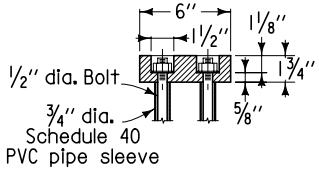

SECTION F-F

COVER PLATE

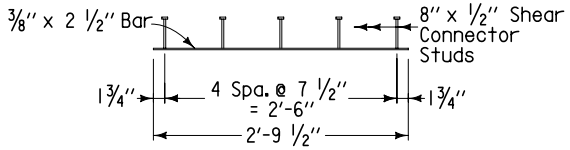

FRAME RING
(2 required)

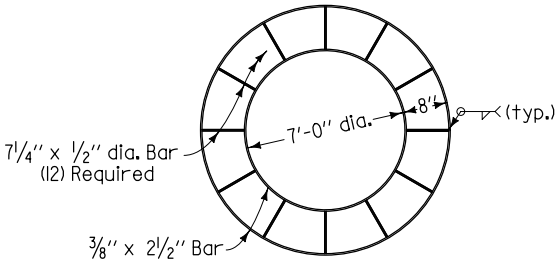

WALL (SHALLOW)

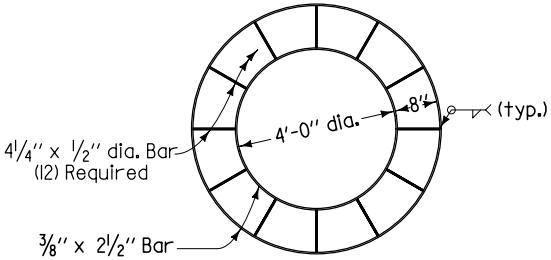

WALL (DEEP)

EDGE ARMOR

Iowa Department of Transportation

STANDARD ROAD PLAN

REVISION	
NEW	10-20-09

SW-548

SHEET 3 of 6

REVISIONS: New. Replaces RA-48B.

Deanna Maifield

APPROVED BY DESIGN METHODS ENGINEER

SINGLE-GRATE BARRIER INTAKE, CIRCULAR

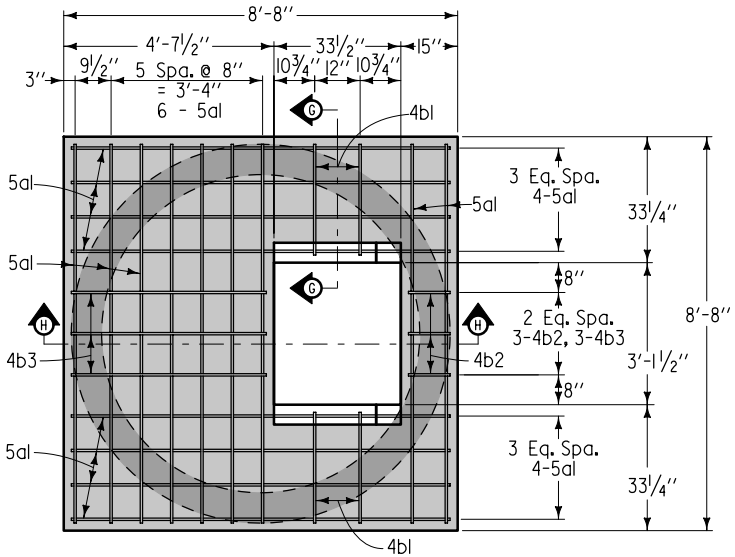

PLAN

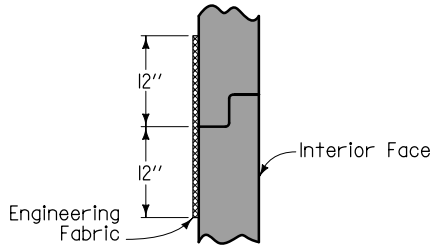

WALL JOINT DETAIL

LID REINFORCING BAR LIST

EPOXY-COATED

BAR	LOCATION	SHAPE	NO.	LENGTH	WEIGHT
5a1	Lid, Longitudinal & Transverse	——	34	8'-4"	296
4b1	Lid Hoop		4	6'-11"	18
4b2	Lid Hoop		3	4'-7"	9
4b3	Lid Hoop		3	11'-4"	23
	EPOXY COATED REINFORCING STEEL - TOTAL				346

LID BENT BAR DETAILS

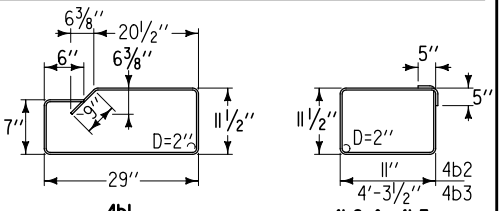

NOTE: ALL DIMENSIONS SHOWN OUT TO OUT. D = PIN DIAMETER

LID QUANTITY SUMMARY (SHALLOW)

Concrete	3.2	CY *
Epoxy Coated Reinforcing Steel	346	LB

* Based on Minimum thickness = 16"

Maximum Pipe Diameter for Pipes at:	
90° Separation	180° Separation
36	48

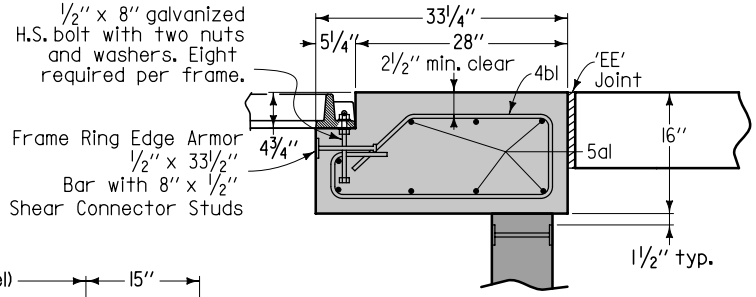

SECTION G-G

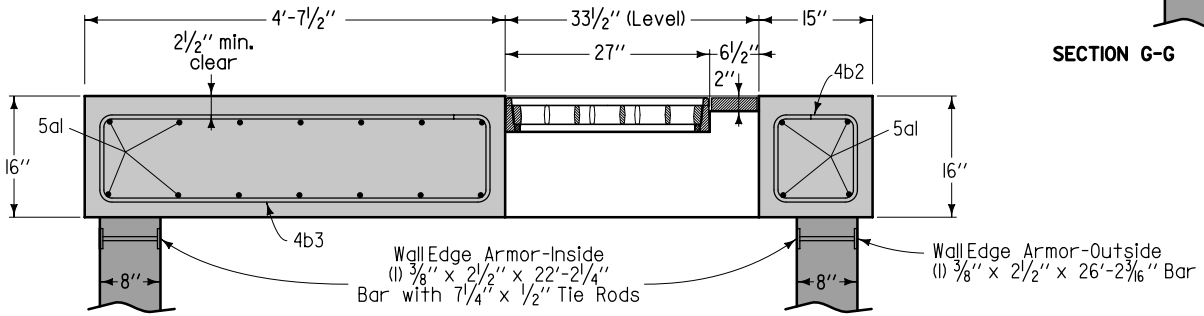

SECTION H-H

LID (SHALLOW)

Iowa Department of Transportation

STANDARD ROAD PLAN

REVISION	
NEW	10-20-09

SW-548

SHEET 4 of 6

REVISIONS: New. Replaces RA-48B.

Deanna Maifield

APPROVED BY DESIGN METHODS ENGINEER

SINGLE-GRATE BARRIER INTAKE, CIRCULAR

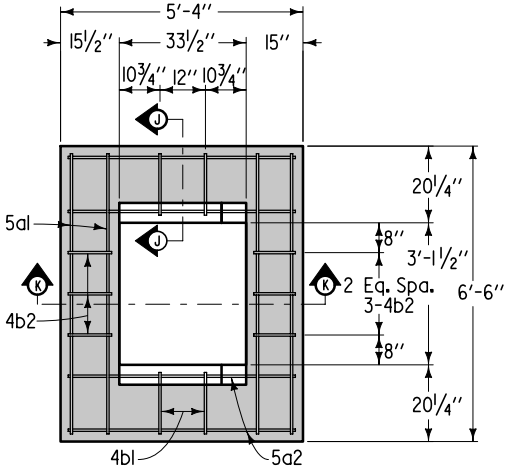

PLAN

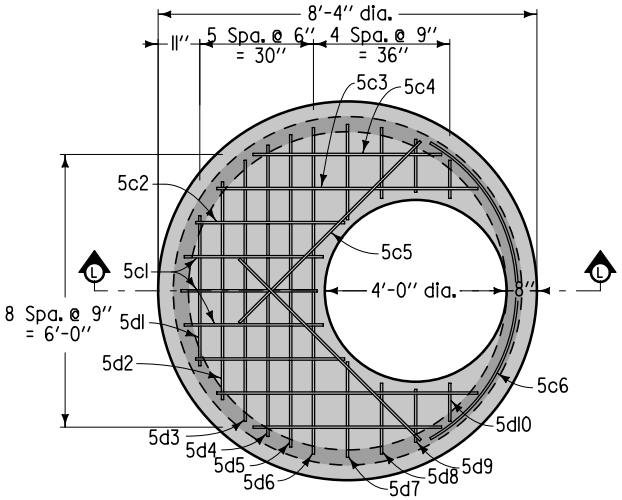

SECTION D-D
INTERMEDIATE LID

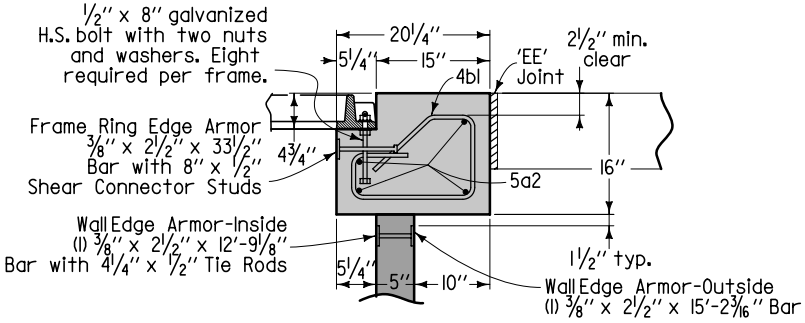

SECTION J-J

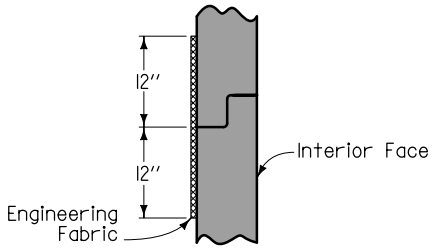

WALL JOINT DETAIL

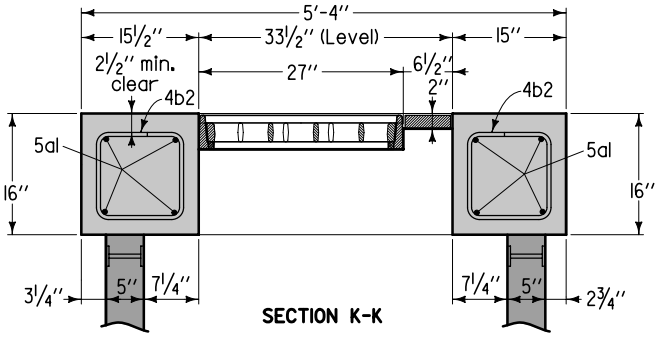

SECTION K-K

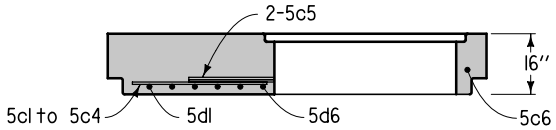

SECTION L-L

LID (DEEP)

LID REINFORCING BAR LIST

EPOXY-COATED

BAR	LOCATION	SHAPE	NO.	LENGTH	WEIGHT
5a1	Lid, Longitudinal	—	8	6'-2"	51
5a2	Lid, Transverse	—	8	5'-0"	42
4b1	Lid Hoop		4	4'-9"	13
4b2	Lid Hoop		6	4'-7"	18
5c1	Intermediate Lid	—	3	3'-0"	9
5c2	Intermediate Lid	—	2	3'-3"	7
5c3	Intermediate Lid	—	2	5'-9"	12
5c4	Intermediate Lid	—	2	4'-2"	9
5c5	Intermediate Lid	—	2	5'-8"	12
5c6	Intermediate Lid	⌒	1	8'-2"	9
5d1	Intermediate Lid	—	1	3'-5"	4
5d2	Intermediate Lid	—	1	4'-10"	5
5d3	Intermediate Lid	—	1	5'-9"	6
5d4	Intermediate Lid	—	1	6'-5"	7
5d5	Intermediate Lid	—	1	6'-10"	7
5d6	Intermediate Lid	—	1	7'-2"	7
5d7	Intermediate Lid	—	2	2'-1"	4
5d8	Intermediate Lid	—	2	1'-6"	3
5d9	Intermediate Lid	—	2	1'-2"	2
5d10	Intermediate Lid	—	2	0'-11"	2
			EPOXY COATED REINFORCING STEEL - TOTAL		229

LID BENT BAR DETAILS

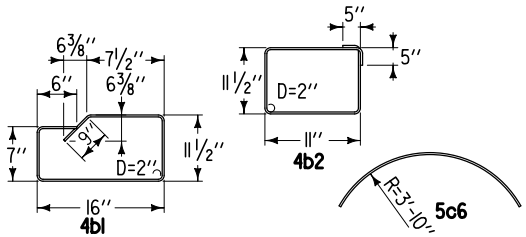

NOTE: ALL DIMENSIONS SHOWN OUT TO OUT. D=PIN DIAMETER

LID QUANTITY SUMMARY (DEEP)

Concrete - Lid	1.2 CY
Concrete - Intermediate Lid	2.1 CY
Epoxy Coated Reinforcing Steel	229 LB

Iowa Department of Transportation

STANDARD ROAD PLAN

REVISION	
NEW	10-20-09

SW-548

SHEET 5 of 6

REVISIONS: New. Replaces RA-48B.

Deanna Maifield

APPROVED BY DESIGN METHODS ENGINEER

SINGLE-GRATE BARRIER INTAKE, CIRCULAR

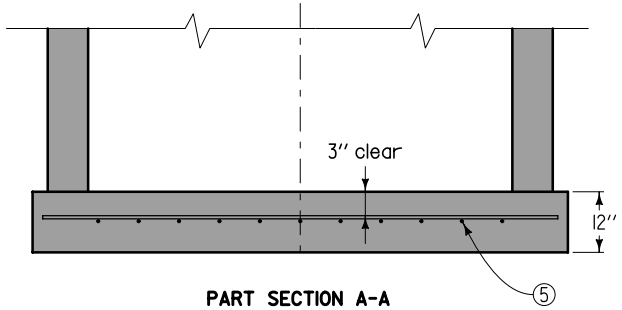

PART SECTION A-A

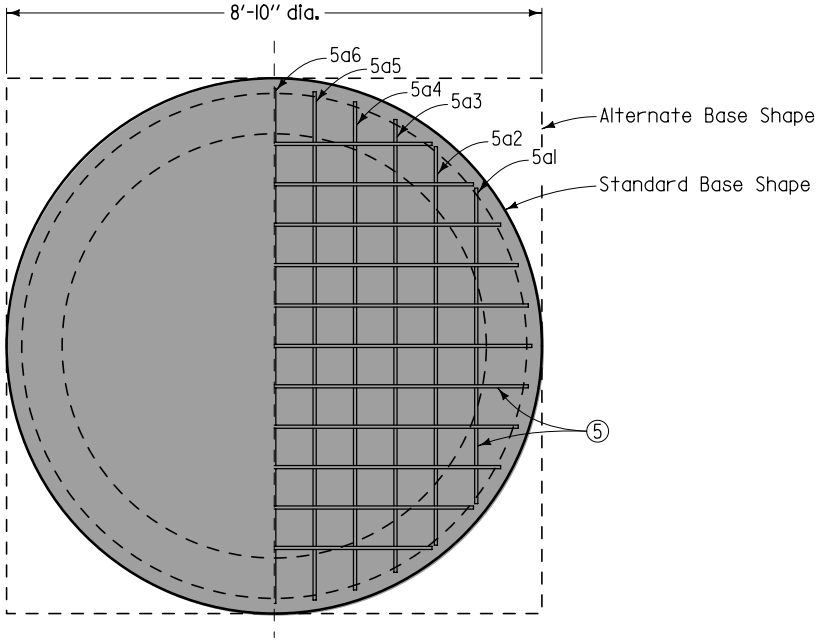

PLAN

BASE REINFORCING BAR LIST					
EPOXY-COATED					
BAR	LOCATION	SHAPE	NO.	LENGTH	WEIGHT
5a1	Base, Longit. & Transverse	——	4	5'-3"	22
5a2	Base, Longit. & Transverse	——	4	6'-7"	27
5a3	Base, Longit. & Transverse	——	4	7'-6"	31
5a4	Base, Longit. & Transverse	——	4	8'-0"	33
5a5	Base, Longit. & Transverse	——	4	8'-4"	35
5a6	Base, Longit. & Transverse	——	2	8'-6"	18
EPOXY COATED REINFORCING STEEL - TOTAL					166

BASE QUANTITY SUMMARY	
Concrete	2.3 CY *
Epoxy Coated Reinforcing Steel	166 LB *

* Based on Standard Base Shape

⑤ #5 at 8-inch centers each direction or equivalent welded wire fabric.

Iowa Department of Transportation

STANDARD ROAD PLAN

REVISION	
NEW	10-20-09

SW-548

SHEET 6 of 6

REVISIONS: New. Replaces RA-48B.

Deanna Maifield

APPROVED BY DESIGN METHODS ENGINEER

SINGLE-GRATE BARRIER INTAKE, CIRCULAR

BASE