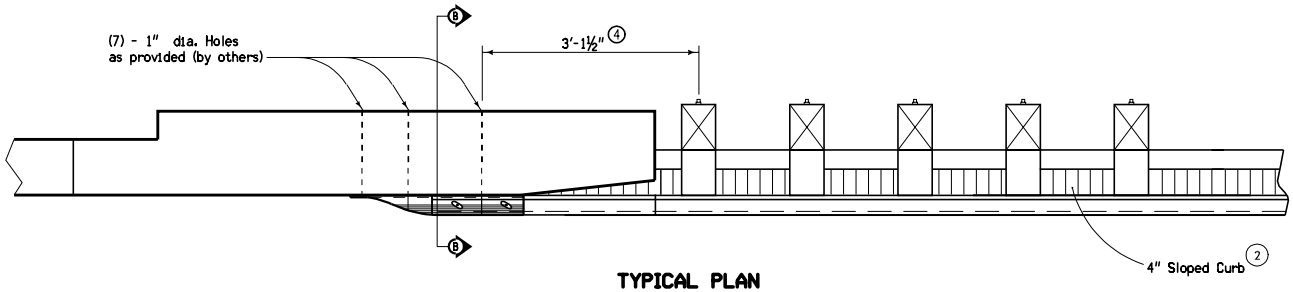

TYPICAL PLAN

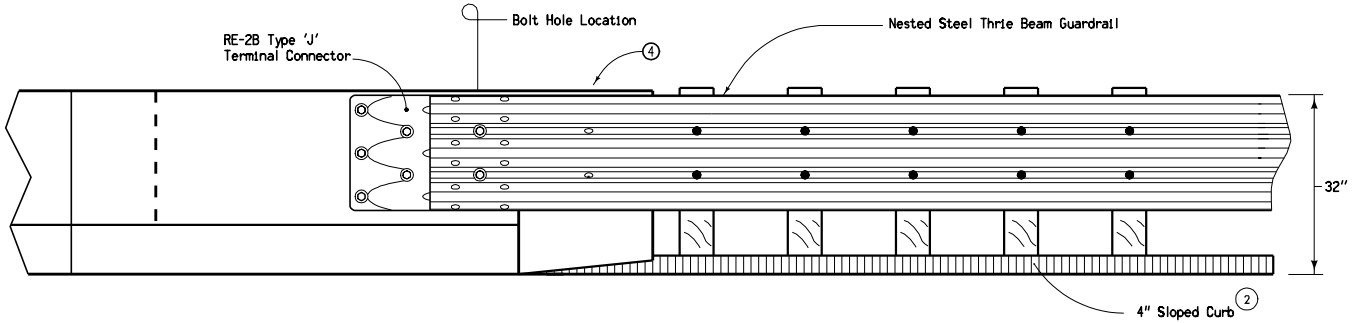

TYPICAL ELEVATION

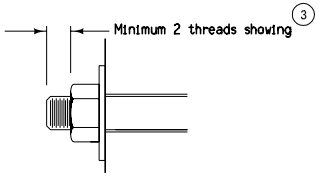

DETAIL "B"

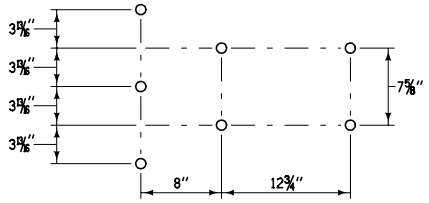

BOLT PATTERN

For RE-2B Type "J" Terminal Section

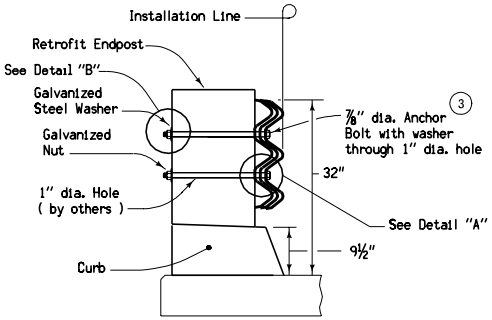

SECTION B-B

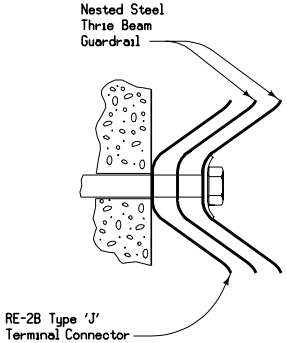

DETAIL "A" 1

1. For attachments on the trailing end of a one-way bridge, the Type "J" terminal connector should be lapped on the outside of the nested thrie beam rails.
2. See applicable Bridge Approach Section standards for specific requirements.
3. 7/8" anchor bolts shall be of sufficient length to leave a minimum of 2 thread widths outside of the nut.
4. First post and blockout shown on RE-68 is skipped.

Contract Items:

Guardrail, End Anchorage, Beam, RE-69

List of Materials for the RE-69B End Anchorage:

(1) RE-2B Type "J" terminal connector
(7) Approved 7/8" dia. X sufficient length hex bolts
(7) Approved 7/8" dia. hex nuts
(14) Approved 15/16" I.D., 2 1/4" O.D., 5/32" thick washers

Tabulations: 108-8A, 108-31, 108-32

Iowa Department of Transportation

STANDARD ROAD PLAN

REVISION	
6	10-16-07

RE-69B

SHEET 1 of 1

REVISIONS: Showed 4" sloped curb on plan view; corrected Detail "A," end section elevation, and a spelling error.

Deanna Maifield
APPROVED BY DESIGN METHODS ENGINEER

GUARDRAIL INSTALLATION
CONNECTION TO
RETROFIT BRIDGE ENDPOST