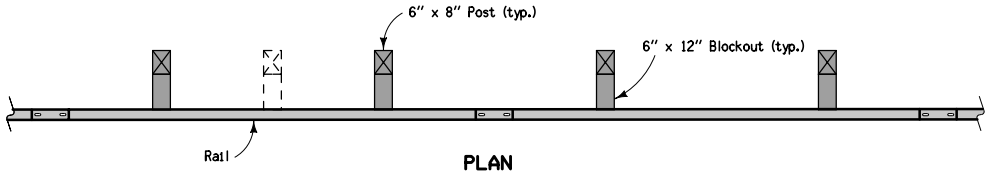

PLAN

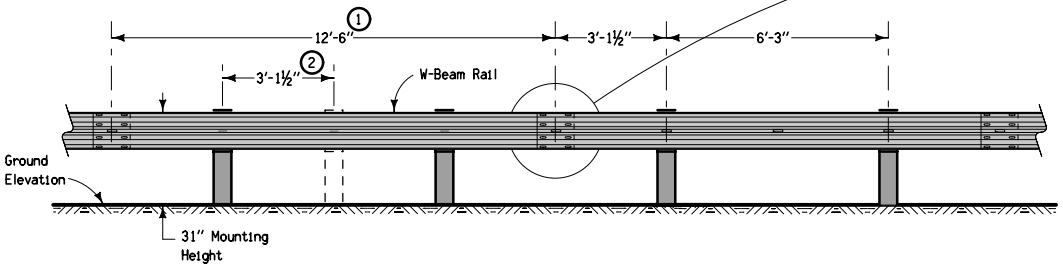

ELEVATION

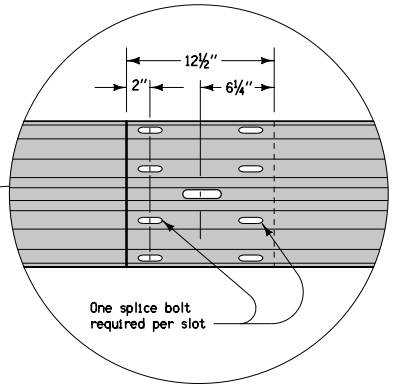

RAIL SPLICE

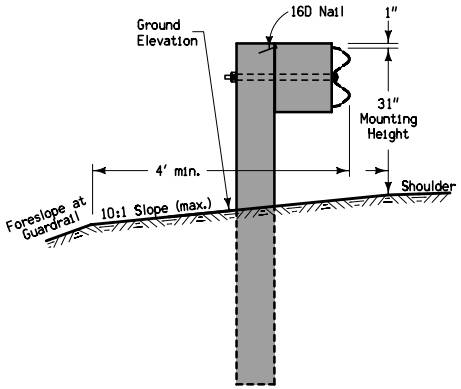

TYPICAL SECTION

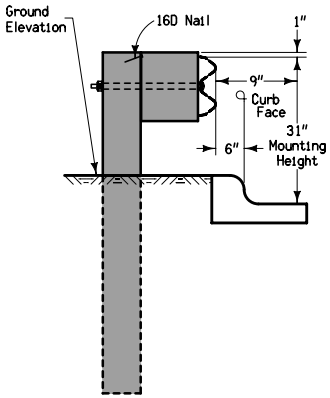

TYPICAL SECTION WITH CURB

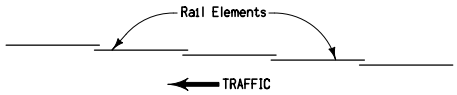

LAPPING PROCEDURE

W-BEAM INSTALLATION

Shop-curve rails when installed on a radius less than 150 feet.

For additional information regarding guardrail installation, refer to:

RE-7
RE-47
RE-48A
RE-48B

① Unless specified otherwise, rail elements may be furnished in either 25' or 12'-6" sections.

② When specified by the contract documents, install posts at 3'-1½" spacing.

③ When posts are placed in paved shoulder, drill minimum 1'-3" diameter holes through the pavement. Backfill holes with special backfill

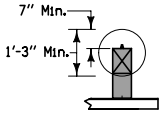

INSTALLATION IN PAVEMENT ③

Possible Contract Item:

Installation of Guardrail

Iowa Department of Transportation

STANDARD ROAD PLAN

REVISION	
NEW	10-20-09

RE-100

SHEET 1 of 3

REVISIONS: New.

Deanna Maifield
APPROVED BY DESIGN METHODS ENGINEER

STEEL BEAM GUARDRAIL (MGS)

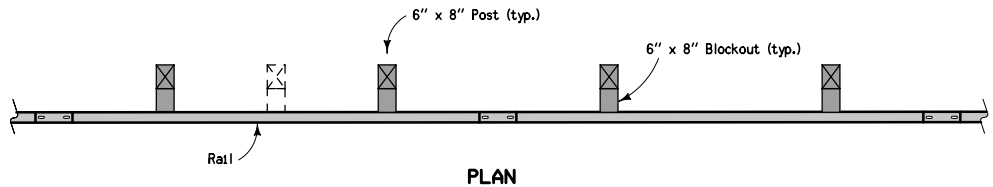

PLAN

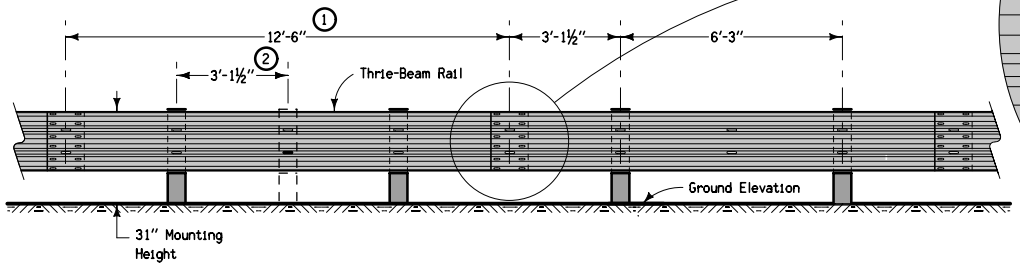

ELEVATION

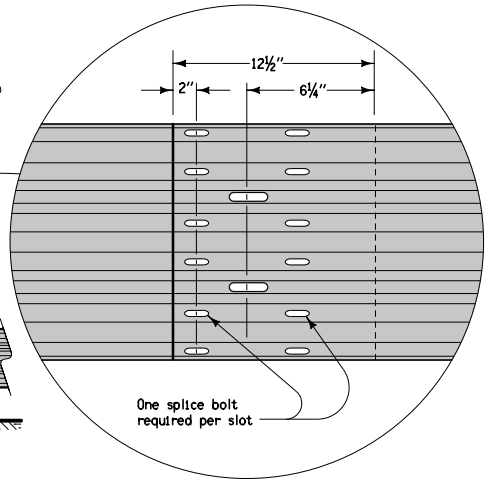

RAIL SPLICE

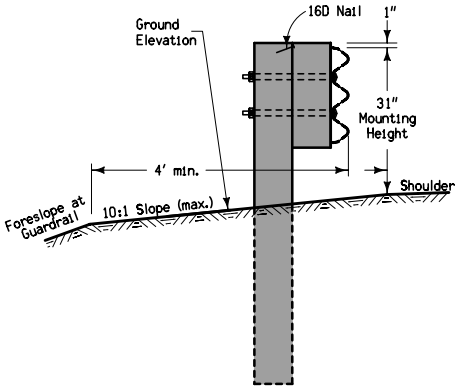

TYPICAL SECTION

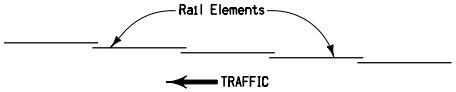

LAPPING PROCEDURE

THRIE-BEAM INSTALLATION

② When specified by the contract documents, install posts at 3'-1½" spacing.

Iowa Department of Transportation

STANDARD ROAD PLAN

REVISION	
NEW	10-20-09

RE-100

SHEET 2 of 3

REVISIONS: New.

Deanna Maifield
APPROVED BY DESIGN METHODS ENGINEER

STEEL BEAM GUARDRAIL (MGS)

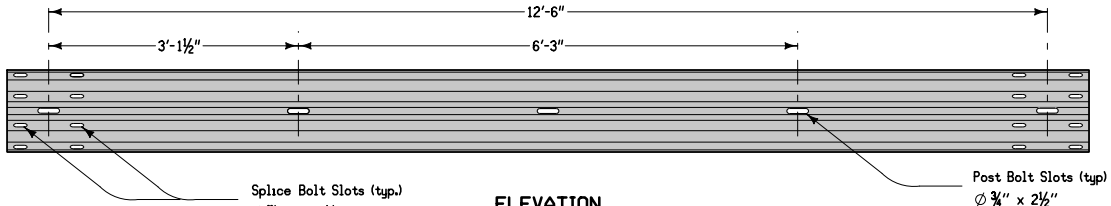

ELEVATION

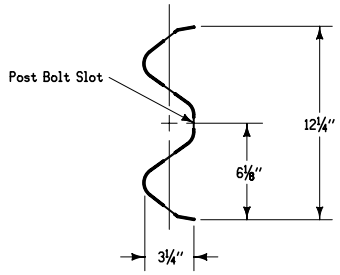

TYPICAL SECTION

W-BEAM RAIL

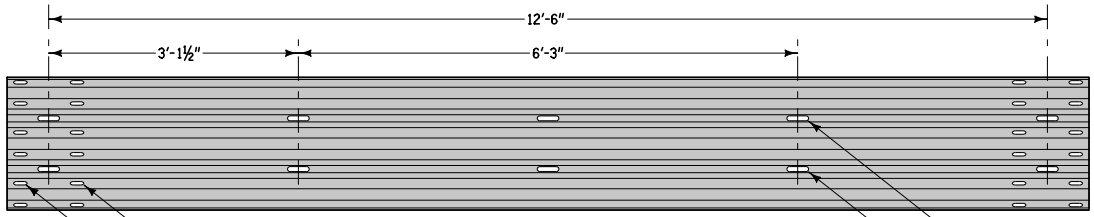

ELEVATION

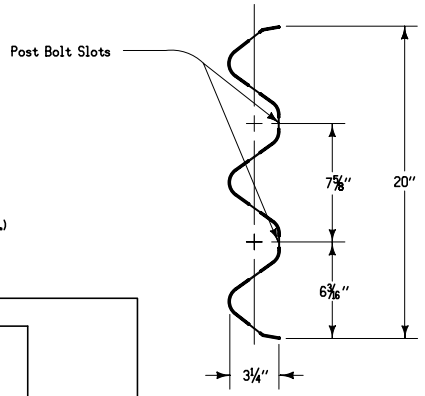

TYPICAL SECTION

THRIE-BEAM RAIL

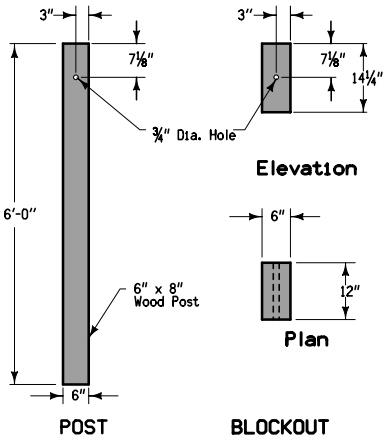

POST BLOCKOUT

W-BEAM

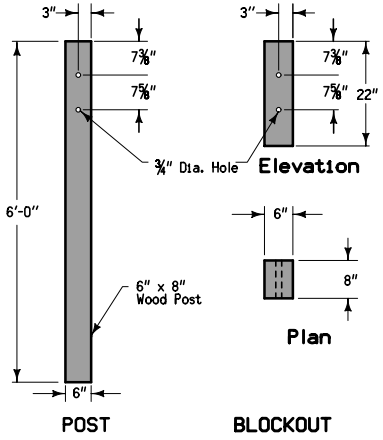

POST BLOCKOUT

THRIE-BEAM

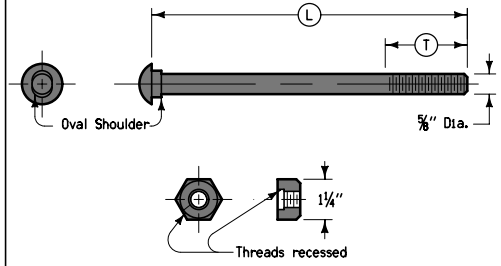

APPLICATION	T	L
Post Bolt for 8" Blockout	2½"	18"
Post Bolt for 12" Blockout	2½"	22"
Splice Bolt	1¹⁄₁₆"	1¼"

T = Min. Thread Length L = Bolt Length

HARDWARE

Iowa Department of Transportation

STANDARD ROAD PLAN

REVISION	
NEW	10-20-09

RE-100

SHEET 3 of 3

REVISIONS: New.

Deanna Maifield
APPROVED BY DESIGN METHODS ENGINEER

STEEL BEAM GUARDRAIL (MGS)