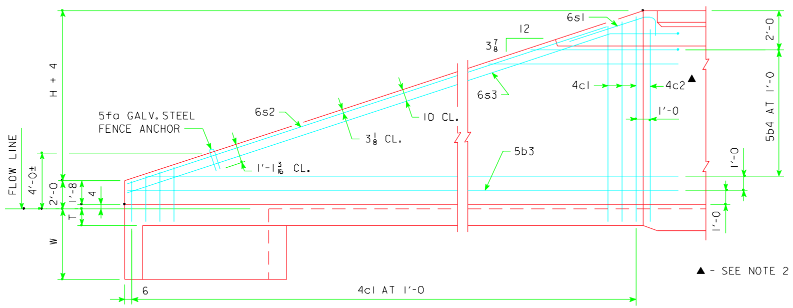

TYPICAL VIEW - FRONT FACE REINFORCING

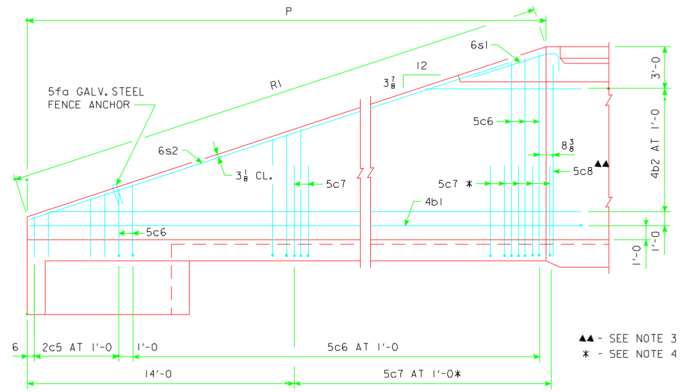

TYPICAL VIEW - BACK FACE REINFORCING

CULVERT HEIGHT (H)	SLOPE y INCHES
6'-0	$4\frac{3}{4}$
8'-0	$5\frac{1}{16}$
10'-0	$5\frac{1}{4}$
12'-0	$5\frac{3}{8}$

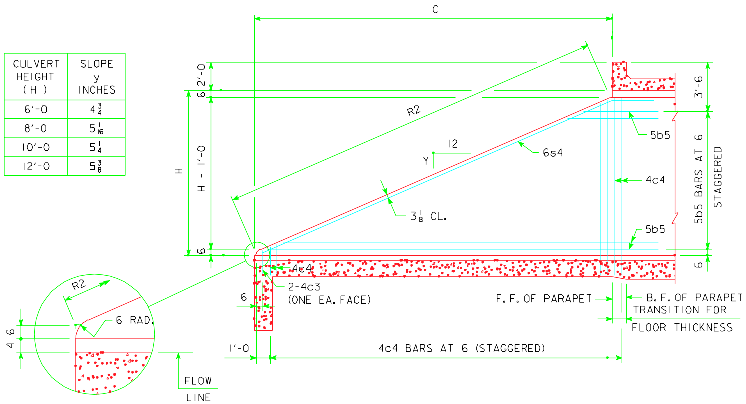

TYPICAL VIEW - INTERIOR WALL

HEADWALL NOTES:

1. BAR SPACING AND POSITIONS SHOWN ARE SIMILAR FOR ALL SIZES OF HEADWALL IN THIS STANDARD.
2. ONE 4c2 BAR, HEADWALL HEIGHTS OF 6'-0, 8'-0, 10'-0 AND 12'-0.
3. ONE 5c8 BAR, HEADWALL HEIGHTS OF 6'-0, 8'-0, 10'-0, AND 12'-0.
4. NOT APPLICABLE TO HEADWALL HEIGHT OF 6'-0.
5. FOR DIMENSION TABLE SEE SHEET TRH 0-1-01.

LATEST REVISION DATE :

APPROVED BY :

STANDARD DESIGN

FLARED WING HEADWALLS

FOR

TRIPLE REINFORCED CONCRETE BOX CULVERTS

IOWA DEPARTMENT OF TRANSPORTATION - HIGHWAY DIVISION

SEPT., 2001

TRH 0-4-01

TRH04.S01 - 09-01 THIS SHEET ISSUED.

XXXXXXXXXXSYSTEMTIME XXXXXXXUSERNAME XXXXXXXXXXXXXXXXXXXXXXXXXXXXXXXXXXXXXXXXXXXXXXXXXXXXXXXXXXXXXDGNSPEC